Cisal
TEL. (+39) 0322 918111
MAIL. cisal@cisal.it

# Exposed part for concealed S.L. shower valve LESS MINIMAL_LN003000C



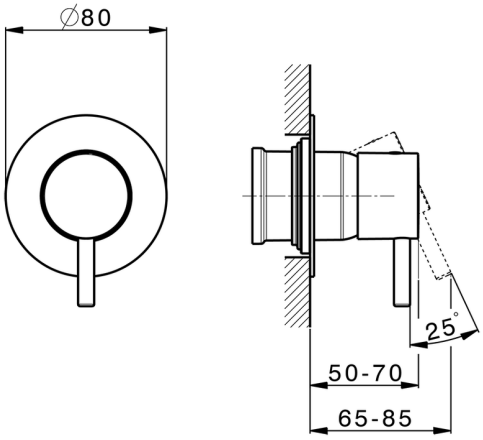


MODEL **LN003000C**

Exposed part for concealed S.L.shower valve,without concealed part,for item ZA005300-ZA0G1700

AVAILABLE FINISHINGS

- **21** 21 Chrome
- **2F** 2F Brushed Nickel
- **40** 40 Matt Black
- **4Q** 4Q Matt White
- **2W** 2W Brushed Gold
- **26** 26 Old Copper
- **3W** 3W Brushed Black Titanium
- **43** 43 Salvia
- **44** 44 Graphite
- **45** 45 Argilla
- **46** 46 Metal Bronze
- **47** 47 Cemento

© 2021 Cisal. Via Pietro Durio 160 - 28010 - Alzo (NO) - Italia
Mail: cisal@cisal.it, Telefono: (+39) 0322 918111, P.Iva IT02422810032.

## CHARACTERISTICS

| | |
|---|---|
| Installation | **Concealed** |
| Required concealed parts | **ZA0G1700** |
| | **ZA005301** |
| | **ZA005300** |

Cisal
TEL. (+39) 0322 918111
MAIL. cisal@cisal.it

# Concealed single lever shower mixer CONCEALED_ZA005301



MODEL **ZA005301**

Concealed single lever shower mixer,1/2" concealed shower,without trim kit,with noise reducers

## AVAILABLE FINISHINGS

**04** 04 Without finishing

## CHARACTERISTICS

| | |
|---|---|
| Concealed | **1** |
| Cartridge Spare Parts | **ZZ94035000** |

**35 mm Cartridge**

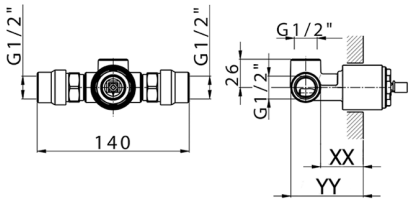


Piastra/Plate/Plaque/Platte/Placa
2-3mm: XX 27-47 YY 54-74
10mm: XX 16-40 YY 43-68

© 2021 Cisal. Via Pietro Durio 160 - 28010 - Alzo (NO) - Italia
Mail: cisal@cisal.it, Telefono: (+39) 0322 918111, P.Iva IT02422810032.

Cisal
TEL. (+39) 0322 918111
MAIL. cisal@cisal.it

# Concealed single lever shower mixer CONCEALED_ZA005300



MODEL **ZA005300**

Concealed single lever shower mixer,1/2" concealed shower,without trim kit

## AVAILABLE FINISHINGS

**04** 04 Without finishing

## CHARACTERISTICS

| | |
|---|---|
| Concealed | **1** |
| Cartridge Spare Parts | **ZZ94035000** |

**35 mm Cartridge**

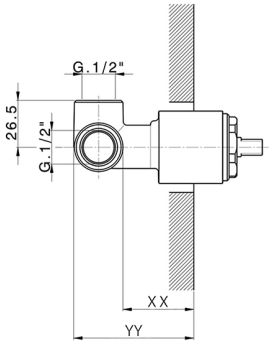


Piastra/Plate/Plaque/Platte/Placa
2-3mm: XX 27-47 YY 54-74
10mm: XX 16-40 YY 43-68

2026-11-23

© 2021 Cisal. Via Pietro Durio 160 - 28010 - Alzo (NO) - Italia
Mail: cisal@cisal.it, Telefono: (+39) 0322 918111, P.Iva IT02422810032.