Cisal
TEL. (+39) 0322 918111
MAIL. cisal@cisal.it

Exposed part for Single Lever One Box Valve SMOOTH X32_X30BM010

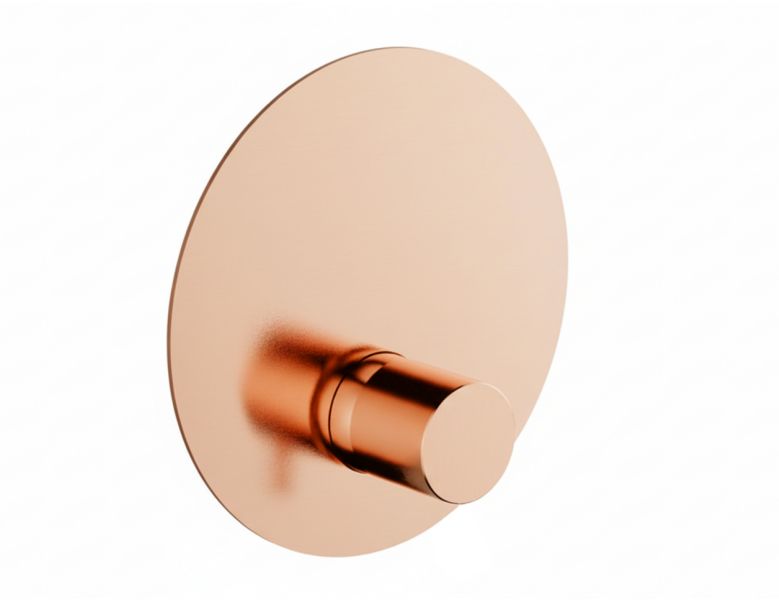

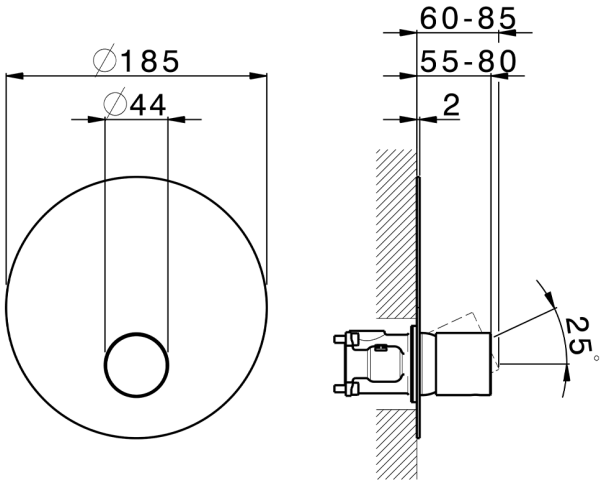

MODEL **X30BM010**

Exposed part for Single Lever One Box Valve,1 Outlet - with smooth handle,Minimum depth of installation: 67 mm,without concealed part - Inox AISI 316L,for items ZA00B030-ZA00B031

AVAILABLE FINISHINGS

D1 D1 Brushed Inox

5H 5H Dark Brass Brushed

5L 5L Brushed Black Titanium

5N 5N Brushed Rose Gold

CHARACTERISTICS

Cartridge Spare Parts	**ZZ97179000**
35 mm Cartridge	
Installation	**Concealed**
Required concealed parts	**ZA00B031**
	ZA00B030

© 2021 Cisal. Via Pietro Durio 160 - 28010 - Alzo (NO) - Italia
Mail: cisal@cisal.it, Telefono: (+39) 0322 918111, P.Iva IT02422810032.

Cisal
TEL. (+39) 0322 918111
MAIL. cisal@cisal.it

Exposed part for Single Lever One Box Valve SMOOTH X32_X30BM010

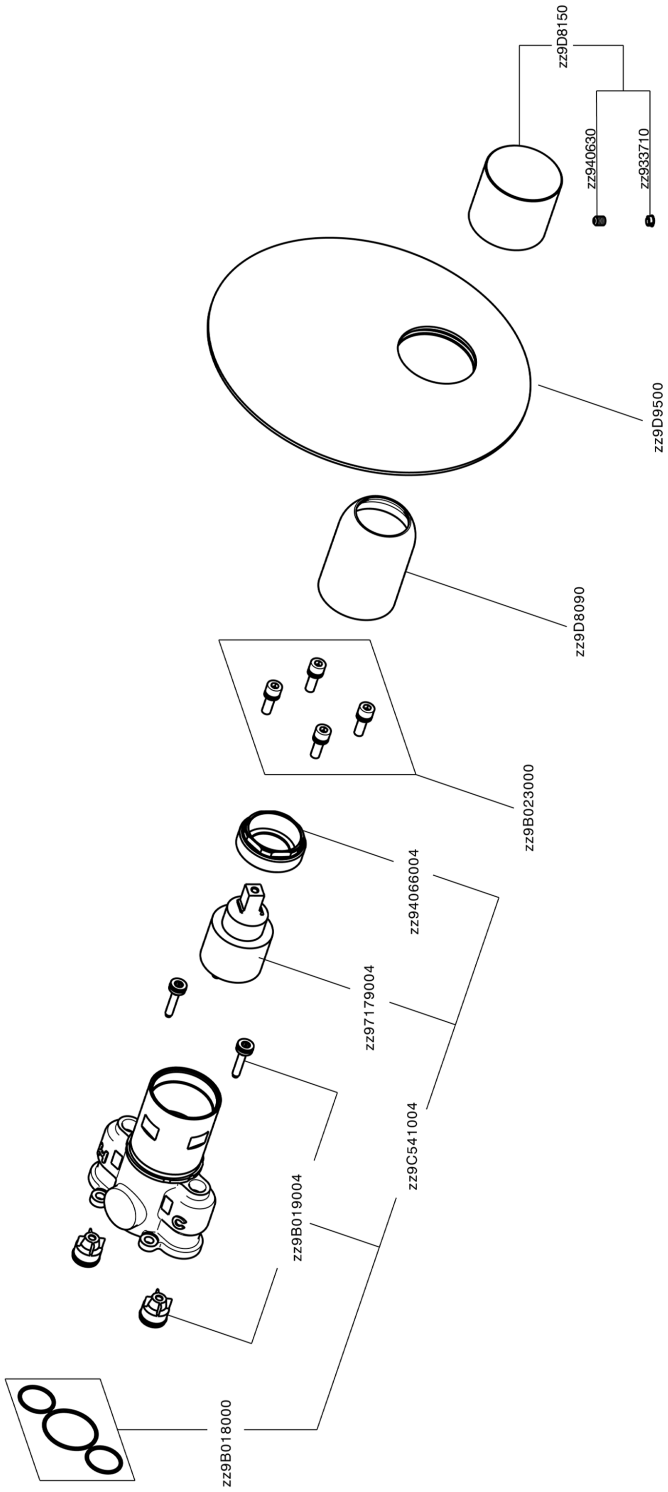

X30BM010

https://en.cisal.it/exposed-part-for-single-lever-one-box-valve-smooth-x32-x30bm010

© 2021 Cisal. Via Pietro Durio 160 - 28010 - Alzo (NO) - Italia
Mail: cisal@cisal.it, Telefono: (+39) 0322 918111, P.Iva IT02422810032.

Cisal
TEL. (+39) 0322 918111
MAIL. cisal@cisal.it

One Box Universal Concealed Part ONE BOX_ZA00B031

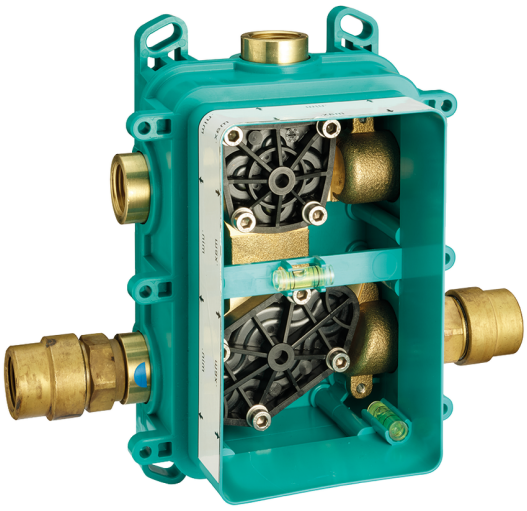

MODEL **ZA00B031**

One Box Universal Concealed Part,for 1,2 or 3 outlet thermostatic or single lever,without trim kit,with noise reducers,with sealing gasket

AVAILABLE FINISHINGS

04 04 Without finishing

CHARACTERISTICS

Concealed	**1**

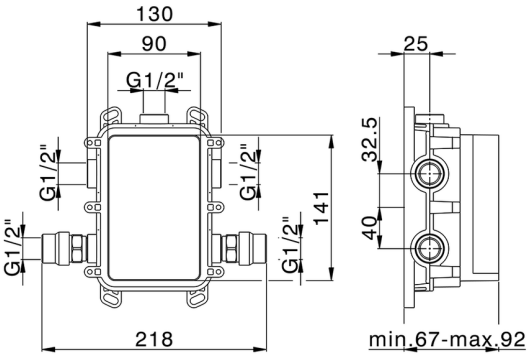

Thermostatic

The Cisal thermostatic is your personal water manager, helping you to handle, control and save water and energy.

© 2021 Cisal. Via Pietro Durio 160 - 28010 - Alzo (NO) - Italia
Mail: cisal@cisal.it, Telefono: (+39) 0322 918111, P.Iva IT02422810032.

Cisal
TEL. (+39) 0322 918111
MAIL. cisal@cisal.it

One Box Universal Concealed Part ONE BOX_ZA00B030

MODEL **ZA00B030**

One Box Universal Concealed Part,for 1,2 or 3 outlet thermostatic or single lever,without trim kit,without noise reducers,with sealing gasket

AVAILABLE FINISHINGS

04 04 Without finishing

CHARACTERISTICS

Concealed	**1**

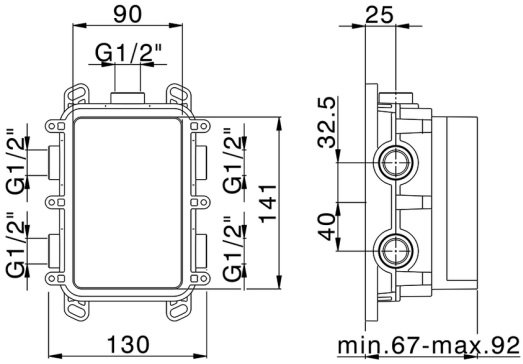

Thermostatic

The Cisal thermostatic is your personal water manager, helping you to handle, control and save water and energy.

2026-03-15

© 2021 Cisal. Via Pietro Durio 160 - 28010 - Alzo (NO) - Italia
Mail: cisal@cisal.it, Telefono: (+39) 0322 918111, P.Iva IT02422810032.