Cisal
TEL. (+39) 0322 918111
MAIL. cisal@cisal.it

Single lever bath mixer, with shower set GRACE_GC000060

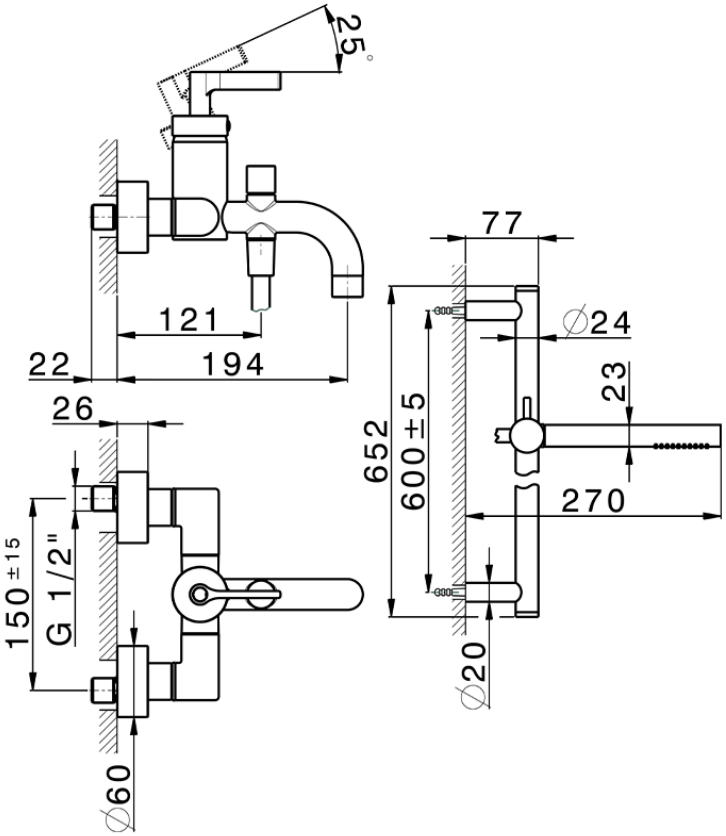

GC000060

https://en.cisal.it/single-lever-bath-mixer-with-shower-set-grace-gc000060

2026-06-08

© 2021 Cisal. Via Pietro Durio 160 - 28010 - Alzo (NO) - Italia
Mail: cisal@cisal.it, Telefono: (+39) 0322 918111, P.Iva IT02422810032.