Cisal
TEL. (+39) 0322 918111
MAIL. cisal@cisal.it

Cover Part for 3 Function Concealed Thermo Valve GRACE_GS00R300

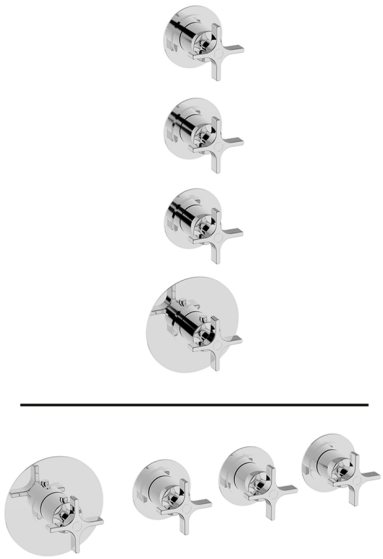

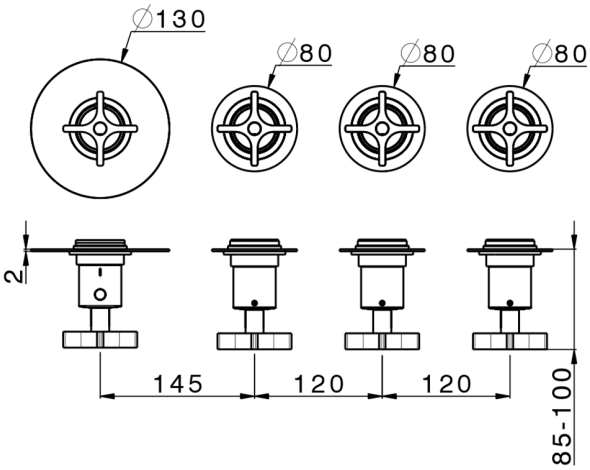

MODEL **GS00R300**

Cover Part for 3 Function Concealed Thermo Valve,for item ZA00R300 horizontal installation,for item ZA00V300 vertical installation

AVAILABLE FINISHINGS

21	21 Chrome
2F	2F Brushed Nickel
2W	2W Brushed Gold
5H	5H Dark Brass Brushed
5L	5L Brushed Black Titanium
6T	6T Chrome/Matt Black

CHARACTERISTICS

Installation	**Concealed**
Required concealed parts	**ZA00V300**
	ZA00R300

Thermostatic

The Cisal thermostatic is your personal water manager, helping you to handle, control and save water and energy.

© 2021 Cisal. Via Pietro Durio 160 - 28010 - Alzo (NO) - Italia
Mail: cisal@cisal.it, Telefono: (+39) 0322 918111, P.Iva IT02422810032.

Cisal
TEL. (+39) 0322 918111
MAIL. cisal@cisal.it

3 Function Concealed Thermostatic Built-in Part CONCEALED_ZA00V300

MODEL **ZA00V300**

3 Function Concealed Thermostatic Built-in Part

AVAILABLE FINISHINGS

04 04 Without finishing

CHARACTERISTICS

Concealed	**1**
Cartridge Spare Parts	**23.51A.HF**

HF Thermostatic Valve

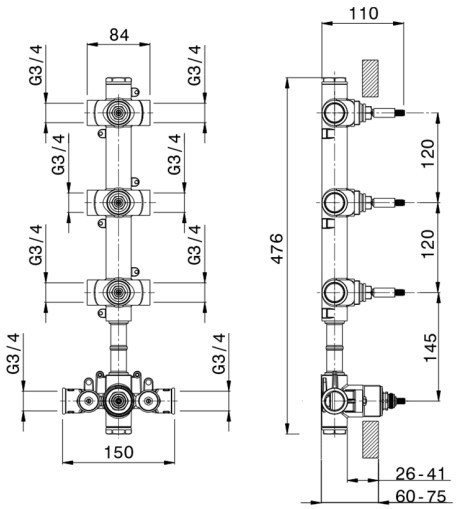

Thermostatic

The Cisal thermostatic is your personal water manager, helping you to handle, control and save water and energy.

© 2021 Cisal. Via Pietro Durio 160 - 28010 - Alzo (NO) - Italia
Mail: cisal@cisal.it, Telefono: (+39) 0322 918111, P.Iva IT02422810032.

Cisal
TEL. (+39) 0322 918111
MAIL. cisal@cisal.it

3 Function Concealed Thermostatic Built-in Part CONCEALED_ZA00R300

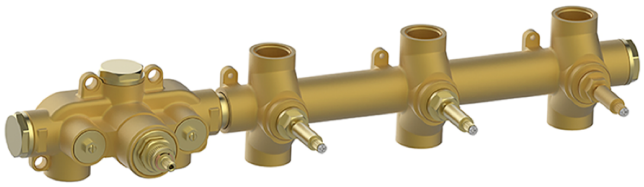

MODEL **ZA00R300**

3 Function Concealed Thermostatic Built-in Part

AVAILABLE FINISHINGS

04 04 Without finishing

CHARACTERISTICS

Concealed	**1**
Cartridge Spare Parts	**23.51A.HF**

HF Thermostatic Valve

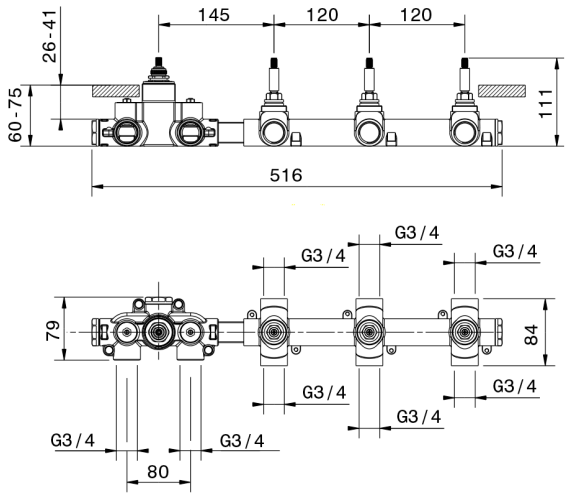

Thermostatic

The Cisal thermostatic is your personal water manager, helping you to handle, control and save water and energy.

2026-09-14

© 2021 Cisal. Via Pietro Durio 160 - 28010 - Alzo (NO) - Italia
Mail: cisal@cisal.it, Telefono: (+39) 0322 918111, P.Iva IT02422810032.