Cisal
TEL. (+39) 0322 918111
MAIL. cisal@cisal.it

Exposed part for single-lever bath shower mixer SLIM_SM014200

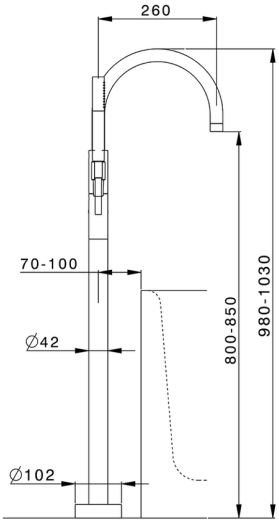

MODEL **SM014200**

Exposed part for single-lever bath shower mixer,handshower holder on column,Brass minimalistic one spray handshower,150 cm smooth SUPREME Flexible Hose,for items ZA004510

AVAILABLE FINISHINGS

21 21 Chrome

2B 2B Polished Nickel

40 40 Matt Black

4Q 4Q Matt White

CHARACTERISTICS

Cartridge Spare Parts	**ZZ95409000**
35 mm Cartridge	
Installation	**Concealed**
Required concealed parts	**ZA004510**

EcoStop

EcoStop feature limits water flow to approximately 50% of maximum output with one point of resistance on setting. Push slightly past the middle stop only when full water output is required. This will save water up to 50%.

© 2021 Cisal. Via Pietro Durio 160 - 28010 - Alzo (NO) - Italia
Mail: cisal@cisal.it, Telefono: (+39) 0322 918111, P.Iva IT02422810032.

Cisal
TEL. (+39) 0322 918111
MAIL. cisal@cisal.it

Exposed part for single-lever bath shower mixer SLIM_SM014200

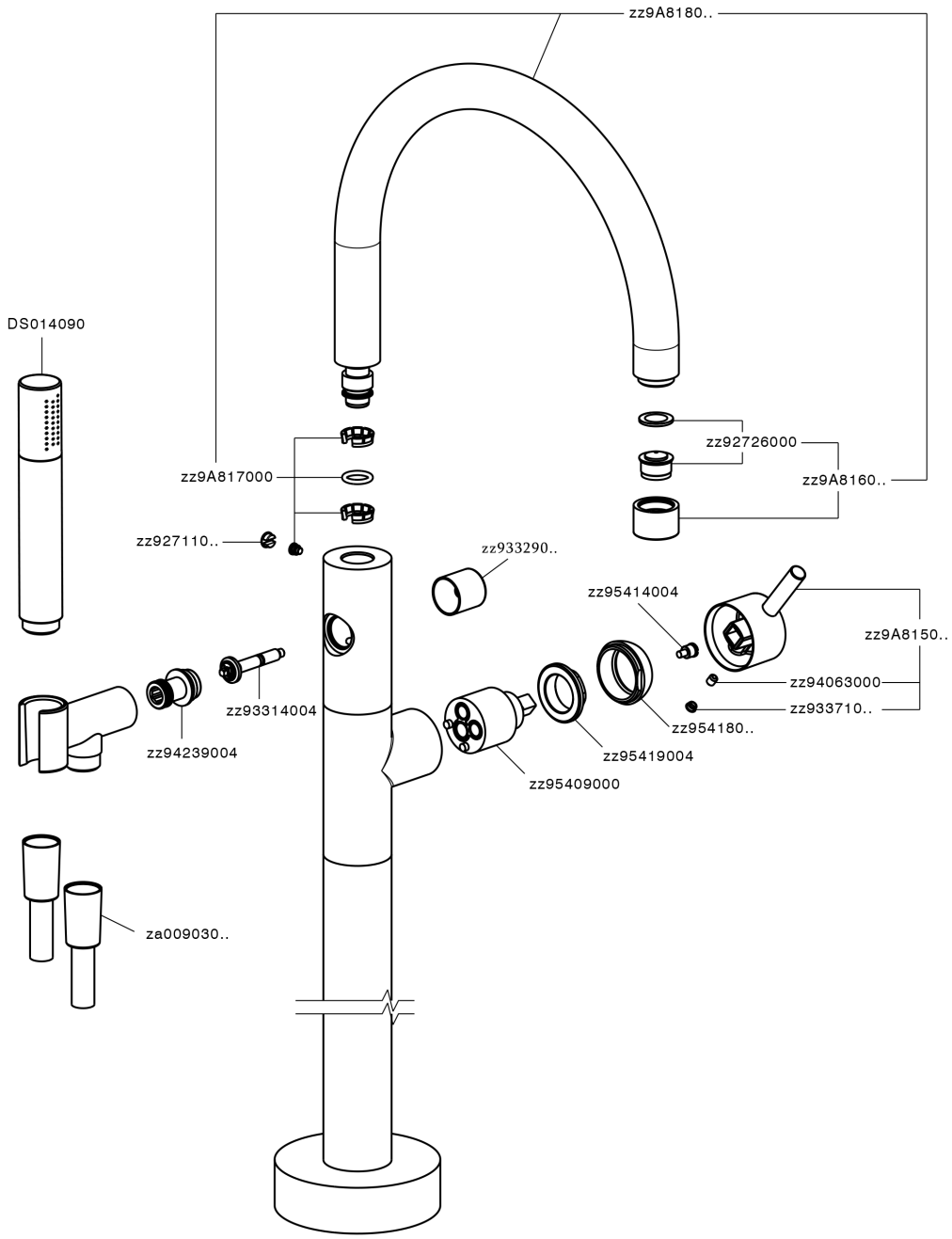

SM014200

https://en.cisal.it/exposed-part-for-single-lever-bath-shower-mixer-slim-sm014200

© 2021 Cisal. Via Pietro Durio 160 - 28010 - Alzo (NO) - Italia
Mail: cisal@cisal.it, Telefono: (+39) 0322 918111, P.Iva IT02422810032.

Cisal
TEL. (+39) 0322 918111
MAIL. cisal@cisal.it

Concealed part single lever free-standing CONCEALED_ZA004510

MODEL **ZA004510**

Concealed part single lever free-standing

AVAILABLE FINISHINGS

04 04 Without finishing

CHARACTERISTICS

Concealed	**1**

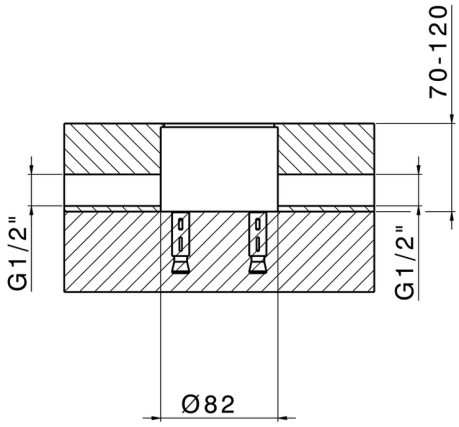

2026-01-13

© 2021 Cisal. Via Pietro Durio 160 - 28010 - Alzo (NO) - Italia
Mail: cisal@cisal.it, Telefono: (+39) 0322 918111, P.Iva IT02422810032.