Cisal
TEL. (+39) 0322 918111
MAIL. cisal@cisal.it

Deck-mounted 5-hole bath mixer XION_XI000260

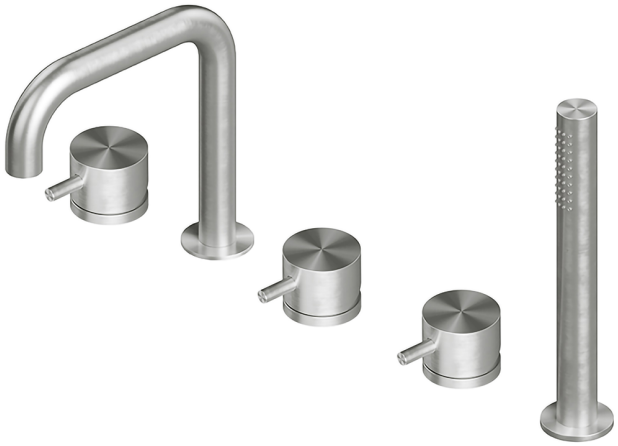

MODEL **XI000260**

Deck-mounted 5-hole bath mixer,progressive mixing,with water spout,D.24 mm INOX minimalistic one spray handshower,150 cm pull-out flexible hose - INOX AISI 316L

AVAILABLE FINISHINGS

D1 D1 Brushed Inox

CHARACTERISTICS

Cartridge Spare Parts **ZZ97179000**

35 mm Cartridge

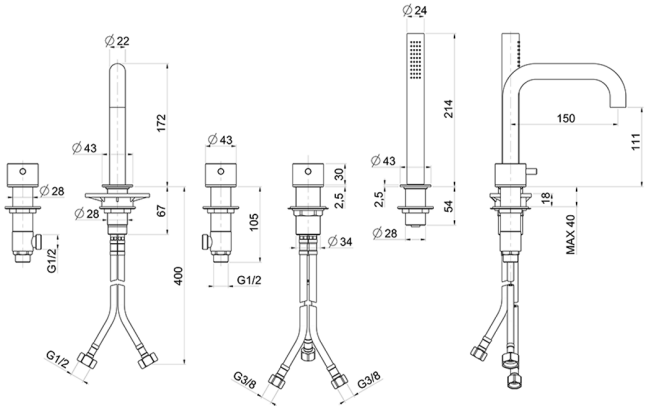

2026-04-28

© 2021 Cisal. Via Pietro Durio 160 - 28010 - Alzo (NO) - Italia
Mail: cisal@cisal.it, Telefono: (+39) 0322 918111, P.Iva IT02422810032.