Cisal
TEL. (+39) 0322 918111
MAIL. cisal@cisal.it

Deck-mounted 5-hole bath mixer XION_XI000260

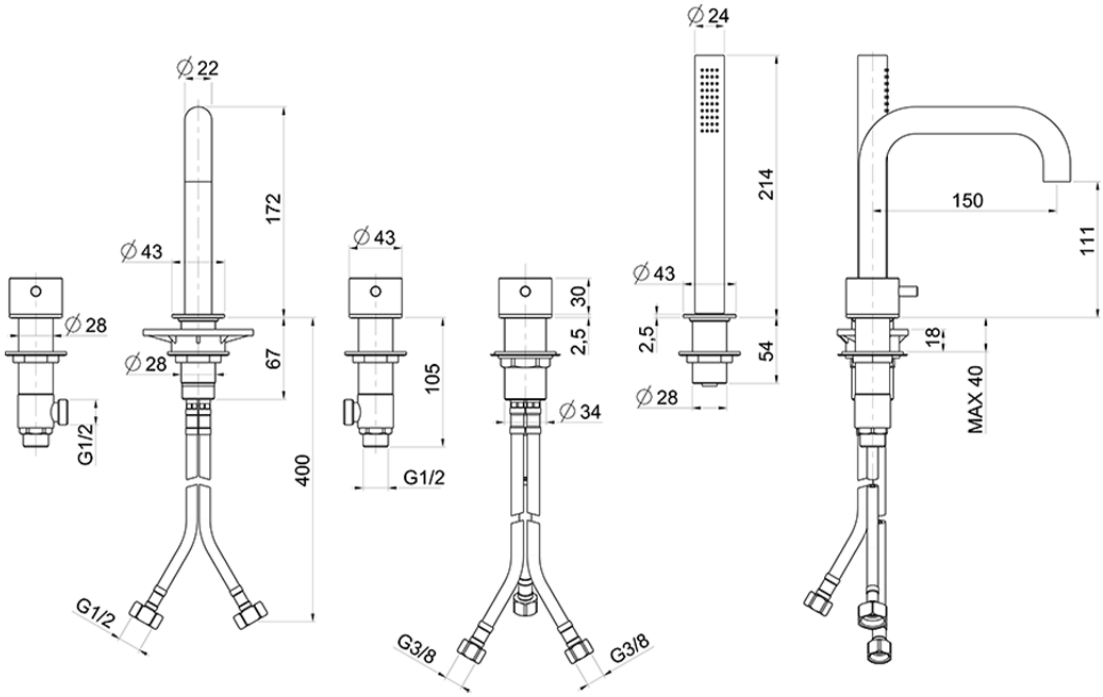

XI000260

https://en.cisal.it/deck-mounted-5-hole-bath-mixer-xion-xi000260

2026-04-08

© 2021 Cisal. Via Pietro Durio 160 - 28010 - Alzo (NO) - Italia
Mail: cisal@cisal.it, Telefono: (+39) 0322 918111, P.Iva IT02422810032.