Cisal
TEL. (+39) 0322 918111
MAIL. cisal@cisal.it

Ø 420 mm Chromotherapy Ceiling showerhead WELLNESS_ZS0C0020

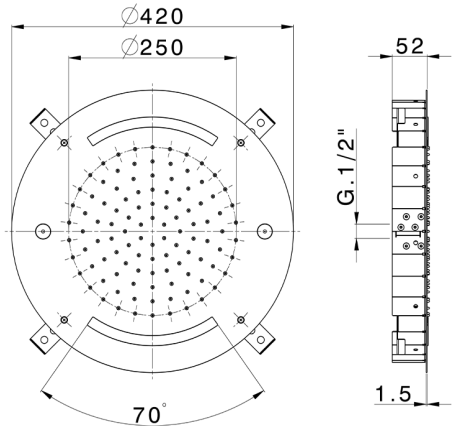

MODEL **ZS0C0020**

Ø 420 mm Chromotherapy Ceiling showerhead,rain, spraying and chromotherapy functions,with remote control included,Stainless Steel AISI 304

AVAILABLE FINISHINGS

- **D1** D1 Brushed Inox
- **40** 40 Matt Black
- **4Q** 4Q Matt White
- **5G** 5G Rose Gold
- **D2** D2 Polished Inox

CHARACTERISTICS

2026-03-16

© 2021 Cisal. Via Pietro Durio 160 - 28010 - Alzo (NO) - Italia
Mail: cisal@cisal.it, Telefono: (+39) 0322 918111, P.Iva IT02422810032.