Cisal
TEL. (+39) 0322 918111
MAIL. cisal@cisal.it

Ø 420 mm Chromotherapy Ceiling showerhead WELLNESS_ZS0C0020

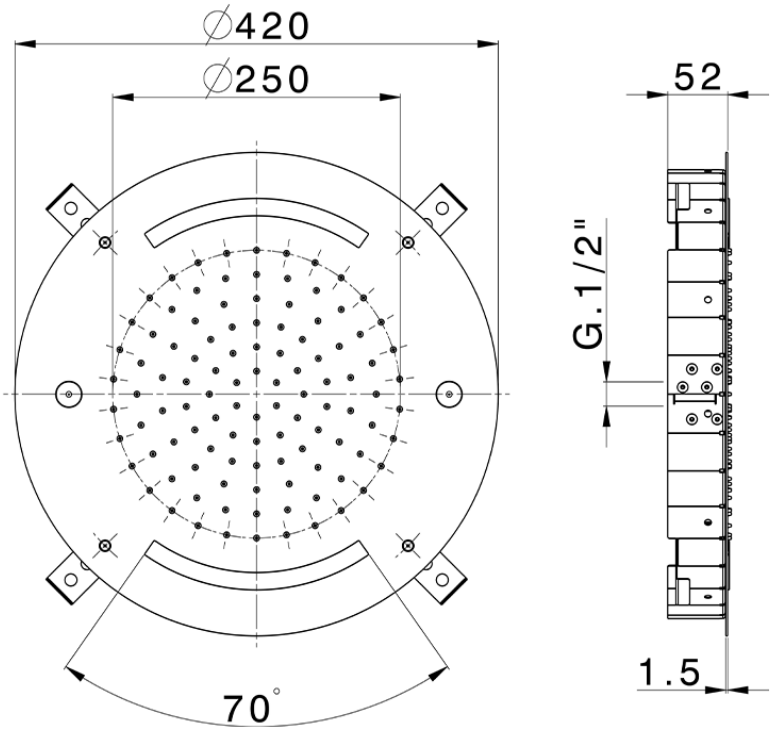

ZS0C0020

https://en.cisal.it/o-420-mm-chromotherapy-ceiling-showerhead-wellness-zs0c0020

2026-03-17

© 2021 Cisal. Via Pietro Durio 160 - 28010 - Alzo (NO) - Italia
Mail: cisal@cisal.it, Telefono: (+39) 0322 918111, P.Iva IT02422810032.