Cisal
TEL. (+39) 0322 918111
MAIL. cisal@cisal.it

Single lever bidet mixer EnergySave NUOVA LESS_LN002555



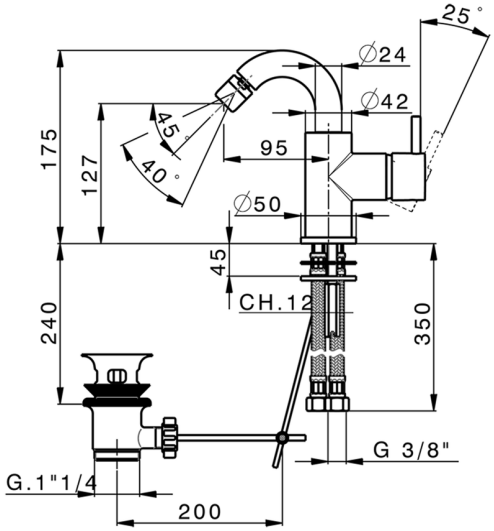

MODEL **LN002555**

Single lever bidet mixer EnergySave,swivel spout,with 1"1/4 automatic pop-up waste,G.3/8" stainless steel flexible hose

AVAILABLE FINISHINGS

21 21 Chrome

2F 2F Brushed Nickel

40 40 Matt Black

4Q 4Q Matt White

CHARACTERISTICS

Cartridge Spare Parts **ZZ95409000**

35 mm Cartridge

EcoStop

EcoStop feature limits water flow to approximately 50% of maximum output with one point of resistance on setting. Push slightly past the middle stop only when full water output is required. This will save water up to 50%.

EnergySave

Thanks to the EnergySave device, only cold water will be drawn if the lever is operated in the central position, so that the water heater will not be engaged and no hot water wasted, leading to considerable savings in energy and costs. The temperature can be adjusted by rotating the lever to the left, until the desired temperature is reached.

© 2021 Cisal. Via Pietro Durio 160 - 28010 - Alzo (NO) - Italia
Mail: cisal@cisal.it, Telefono: (+39) 0322 918111, P.Iva IT02422810032.

Single lever bidet mixer EnergySave NUOVA LESS_LN002555

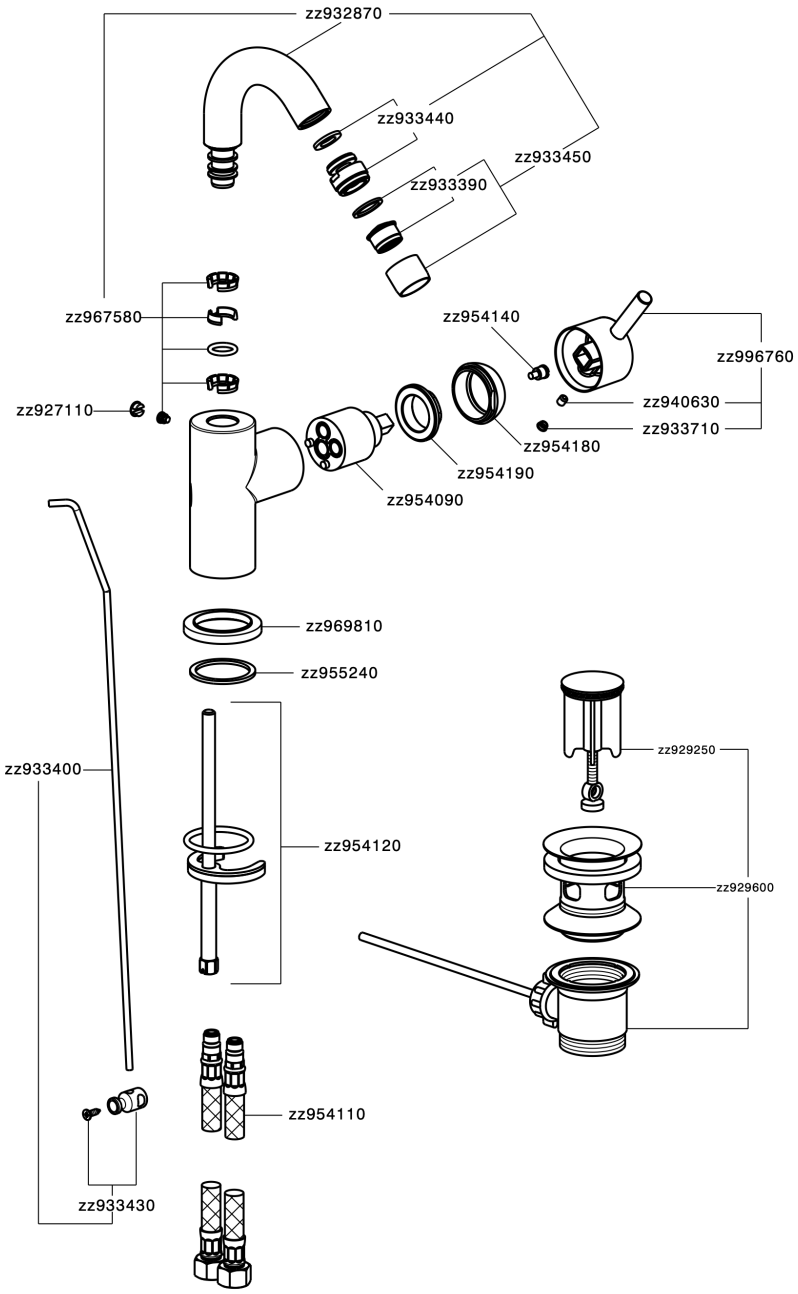

LN002555 https://en.cisal.it/single-lever-bidet-mixer-energysave-nuova-less-ln002555

2026-11-23

© 2021 Cisal. Via Pietro Durio 160 - 28010 - Alzo (NO) - Italia
Mail: cisal@cisal.it, Telefono: (+39) 0322 918111, P.Iva IT02422810032.