Cisal
TEL. (+39) 0322 918111
MAIL. cisal@cisal.it

Single lever tall washbasin mixer VITA_VI003544

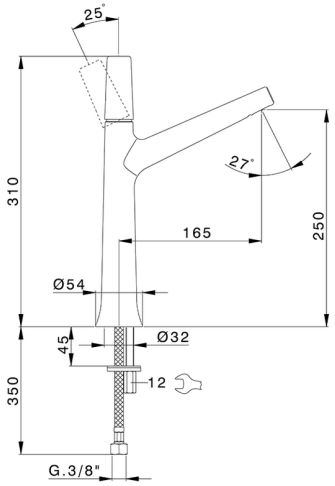

MODEL **VI003544**

Single lever tall washbasin mixer,without automatic pop-up waste,G.3/8" stainless steel flexible hoses

AVAILABLE FINISHINGS

21 21 Chrome

2Q 2Q Black Titanium

40 40 Matt Black

4Q 4Q Matt White

CHARACTERISTICS

Cartridge Spare Parts **ZZ9A708000**

25mm Joystick single-lever cartridge

© 2021 Cisal. Via Pietro Durio 160 - 28010 - Alzo (NO) - Italia
Mail: cisal@cisal.it, Telefono: (+39) 0322 918111, P.Iva IT02422810032.

Cisal
TEL. (+39) 0322 918111
MAIL. cisal@cisal.it

Single lever tall washbasin mixer VITA_VI003544

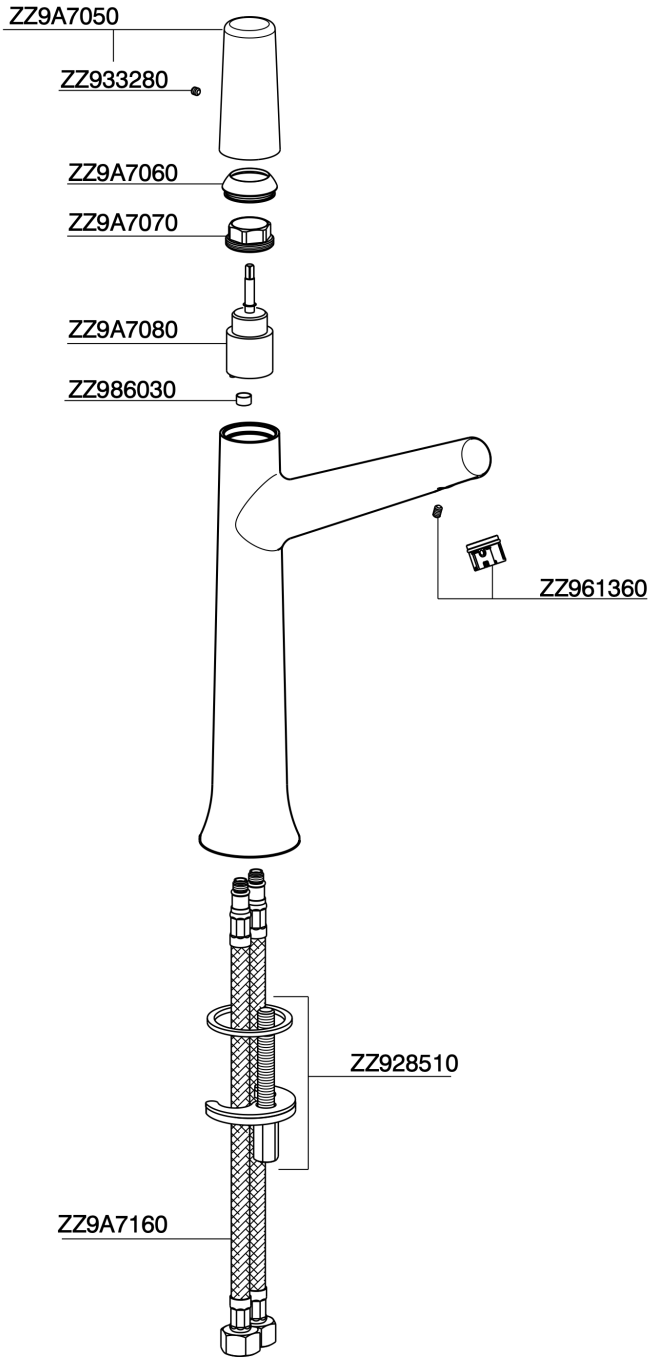

VI003544

https://en.cisal.it/single-lever-tall-washbasin-mixer-vita-vi003544

2026-01-12

© 2021 Cisal. Via Pietro Durio 160 - 28010 - Alzo (NO) - Italia
Mail: cisal@cisal.it, Telefono: (+39) 0322 918111, P.Iva IT02422810032.