Cisal
TEL. (+39) 0322 918111
MAIL. cisal@cisal.it

Single lever 'large' washbasin mixer HI-RISE_RM000494

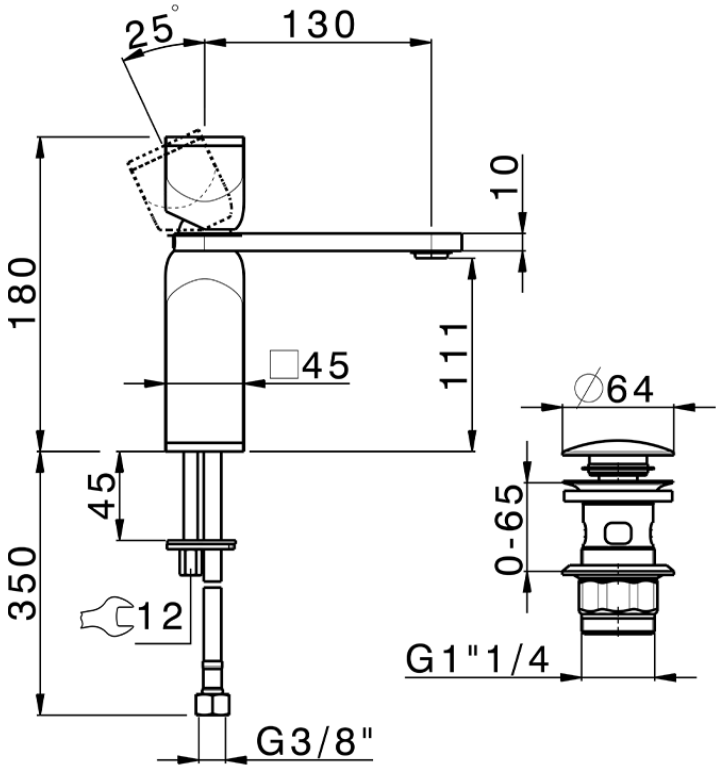

RM000494

https://en.cisal.it/single-lever-large-washbasin-mixer-hi-rise-rm000494

2026-04-09

© 2021 Cisal. Via Pietro Durio 160 - 28010 - Alzo (NO) - Italia
Mail: cisal@cisal.it, Telefono: (+39) 0322 918111, P.Iva IT02422810032.