Cisal
TEL. (+39) 0322 918111
MAIL. cisal@cisal.it

Single lever bidet mixer VOGUE SINCRONIA_I4000564

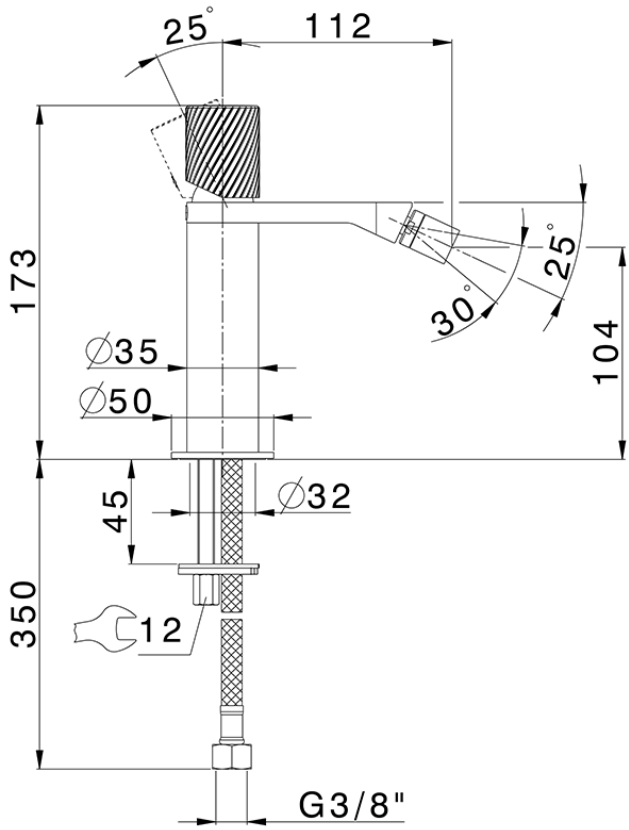

I4000564

https://en.cisal.it/single-lever-bidet-mixer-vogue-sincronia-i4000564

2026-11-23

© 2021 Cisal. Via Pietro Durio 160 - 28010 - Alzo (NO) - Italia
Mail: cisal@cisal.it, Telefono: (+39) 0322 918111, P.Iva IT02422810032.