Cisal
TEL. (+39) 0322 918111
MAIL. cisal@cisal.it

Exposed part for concealed S.L. shower valve NUOVA LESS_LN003000C



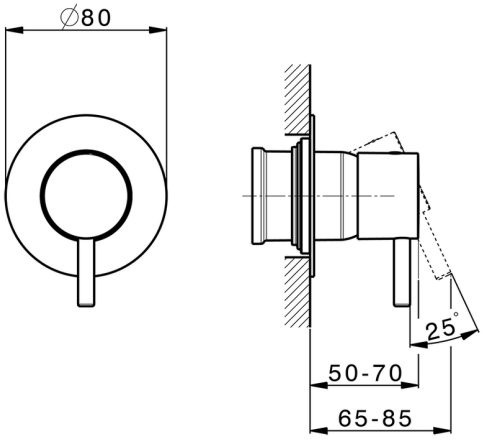

MODEL **LN003000C**

Exposed part for concealed S.L.shower valve,without concealed part,for item ZA005300-ZA0G1700

AVAILABLE FINISHINGS

21	21 Chrome
2F	2F Brushed Nickel
40	40 Matt Black
4Q	4Q Matt White
2W	2W Brushed Gold
26	26 Old Copper
3W	3W Brushed Black Titanium
43	43 Salvia
44	44 Graphite
45	45 Argilla
46	46 Metal Bronze
47	47 Cemento

© 2021 Cisal. Via Pietro Durio 160 - 28010 - Alzo (NO) - Italia
Mail: cisal@cisal.it, Telefono: (+39) 0322 918111, P.Iva IT02422810032.

CHARACTERISTICS

Installation	**Concealed**
Required concealed parts	**ZA0G1700**
	ZA005301
	ZA005300

Cisal
TEL. (+39) 0322 918111
MAIL. cisal@cisal.it

Concealed single lever shower mixer CONCEALED_ZA005301



MODEL **ZA005301**

Concealed single lever shower mixer,1/2" concealed shower,without trim kit,with noise reducers

AVAILABLE FINISHINGS

04 04 Without finishing

CHARACTERISTICS

Concealed	**1**
Cartridge Spare Parts	**ZZ94035000**

35 mm Cartridge

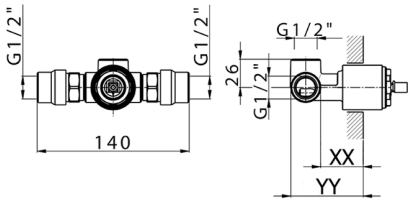

Piastra/Plate/Plaque/Platte/Placa
2-3mm: XX 27-47 YY 54-74
10mm: XX 16-40 YY 43-68

© 2021 Cisal. Via Pietro Durio 160 - 28010 - Alzo (NO) - Italia
Mail: cisal@cisal.it, Telefono: (+39) 0322 918111, P.Iva IT02422810032.

Cisal
TEL. (+39) 0322 918111
MAIL. cisal@cisal.it

Concealed single lever shower mixer CONCEALED_ZA005300



MODEL **ZA005300**

Concealed single lever shower mixer,1/2" concealed shower,without trim kit

AVAILABLE FINISHINGS

04 04 Without finishing

CHARACTERISTICS

Concealed	**1**
Cartridge Spare Parts	**ZZ94035000**

35 mm Cartridge

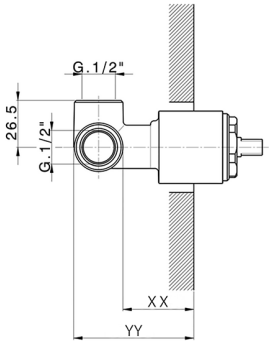

Piastra/Plate/Plaque/Platte/Placa
2-3mm: XX 27-47 YY 54-74
10mm: XX 16-40 YY 43-68

2026-11-23

© 2021 Cisal. Via Pietro Durio 160 - 28010 - Alzo (NO) - Italia
Mail: cisal@cisal.it, Telefono: (+39) 0322 918111, P.Iva IT02422810032.