Cisal
TEL. (+39) 0322 918111
MAIL. cisal@cisal.it

Concealed rapid flow valve ARCANA COMPONENTS_AR002711

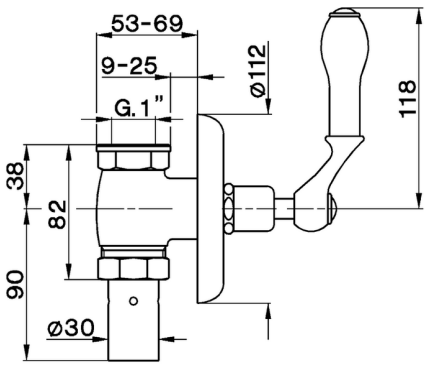

MODEL **AR002711**

Concealed rapid flow valve

AVAILABLE FINISHINGS

- **21** 21 Chrome
- **24** 24 Gold
- **26** 26 Old Copper
- **27** 27 Old Bronze
- **2A** 2A Satin Brushed Nickel

CHARACTERISTICS

© 2021 Cisal. Via Pietro Durio 160 - 28010 - Alzo (NO) - Italia
Mail: cisal@cisal.it, Telefono: (+39) 0322 918111, P.Iva IT02422810032.

Concealed rapid flow valve ARCANA COMPONENTS_AR002711

cisal

AR 00271

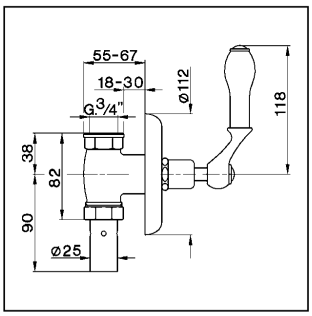

- **Rubinetto passo rapido incasso per W.C.**
- ***Concealed rapid flow valve***
- **WC-Spülventil**
- ***Robinet pour W.C. à encastrer***

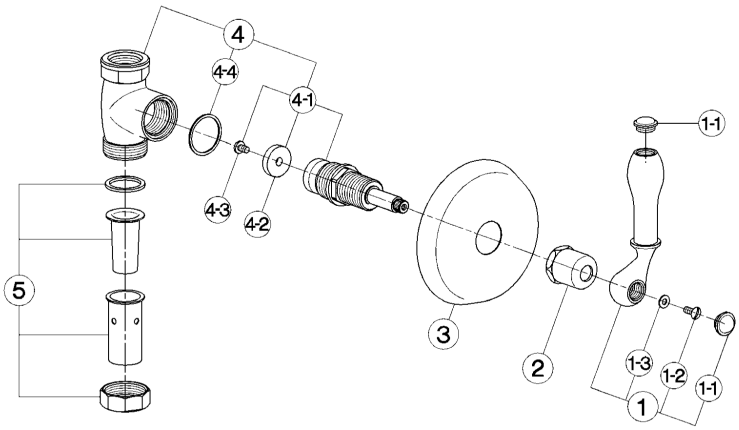

bar	PORTATA * FLOW RATE DURCHFLUSS DÉBIT l/min.
0.1	14
0.2	20
0.3	25.5
0.4	29
0.5	32.5
1	48

* senza resistenza silenziosa (uscita libera)
without hydraulic resistance
ohne Widerstand
sans résistance hydraulique

NR.	DESCRIZIONE *DESCRIPTION* BESCHREIBUNG *DÉSCRIPTION*	N. CODICE *CODE NO.* WERKSNR. *NR. CODE*
1	Maniglia per passo rapido "AR" *Handle rapid flow "AR"* Hebel-Schnelldurchlauf "AR" *Croisillon robinet W.C."AR"*	ZZ 90306 0
1-1	Placchetta a vite maniglia "AR" *Cap for handle "AR"* Abdeckkappe "AR" Griff *Plaquette cache - vis crois. "AR"*	ZZ 92617 0
1-2	Vite M.4,5x10 tb. tc. zigrinata *Screw M.4,5x10* Schraube M.4,5x10 *Vis M.4,5x10*	ZZ 92609 0
1-3	Rondella ottone 10x4,5x0,8 *Ring in brass 10x4,5x0,8* Unterlegscheibe 10x4,5x0,8 *Joint laiton 10x4,5x0,8*	ZZ 92663 0
2	Cappuccio coprivitone per passo rapido *Escutcheon rapid flow valve* Abdeckkappe f/WC-Ventil *Rosace couvre-tête WC*	ZZ 92631 0
3	Rosone per passo rapido *Escutcheon rapid flow valve* Rosette f/WC-Ventil *Rosace - robinet WC "AR"*	ZZ 92630 0

NR.	DESCRIZIONE *DESCRIPTION* BESCHREIBUNG *DÉSCRIPTION*	N. CODICE *CODE NO.* WERKSNR. *NR. CODE*
4	Rubinetto passo rapido incasso 3/4" *Concealed rapid flow 3/4"* WC - Ventil 3/4" *Robinet W.C. 3/4"*	ZZ 92762 0
4	Rubinetto passo rapido incasso 1" *Concealed rapid flow 1"* WC - Ventil 1" *Robinet W.C. 1"*	ZZ 92765 0
4-1	Vitone per passo rapido incasso *Rapid flow headvalve* Oberteil UP-W.C. Ventil *Tête robinet W.C.*	ZZ 92782 0
4-2	Guarnizione NBR 90 SH. 24x6,5x5 *Gasket NBR 90 SH. 24x6,5x5* Dichtung NBR 90 SH. 24x6,5x5 *Joint NBR 90 SH. 24x6,5x5*	ZZ 92709 0
4-3	Vite W 3/16x7,5 tb. *Screw W.3/16x7,5* Schraube W3/16"x7,5 *Vis W.3/16"x7,5*	ZZ 92621 0
4-4	Guarnizione alluminio 32x28,2x1 *Gasket aluminium 32x28,2x1* Dichtung 32x28,2x1 *Joint aluminium 32x28,2x1*	ZZ 92646 0

NR.	DESCRIZIONE *DESCRIPTION* BESCHREIBUNG *DÉSCRIPTION*	N. CODICE *CODE NO.* WERKSNR. *NR. CODE*
5	Codulo completo per passo rapido 3/4" *Connection for rapid flow 3/4"* Verbindungsstueck pass. zu WC-Ventil 3/4" *Ecrou pour robinet WC 3/4"*	ZZ 92763 0
5	Codulo completo per passo rapido 1" incasso *Connection for rapid flow 1"* Verbindungsstueck pass. zu WC-Ventil 1" *Ecrou pour robinet WC 1"*	ZZ 92764 0

AR.19

AR002711 https://en.cisal.it/concealed-rapid-flow-valve-arcana-components-ar002711

2026-04-06

© 2021 Cisal. Via Pietro Durio 160 - 28010 - Alzo (NO) - Italia
Mail: cisal@cisal.it, Telefono: (+39) 0322 918111, P.Iva IT02422810032.