Cisal
TEL. (+39) 0322 918111
MAIL. cisal@cisal.it

Exposed part for single lever washbasin valve NUOVA LESS_LN00551EC

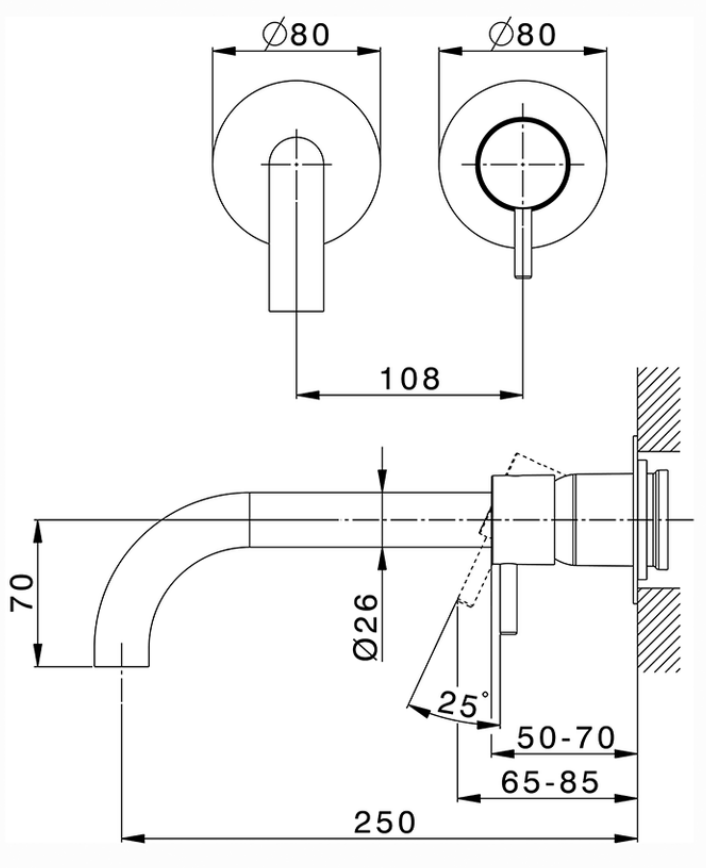

LN00551EC https://en.cisal.it/exposed-part-for-single-lever-washbasin-valve-nuova-less-ln00551ec

2026-09-14

© 2021 Cisal. Via Pietro Durio 160 - 28010 - Alzo (NO) - Italia
Mail: cisal@cisal.it, Telefono: (+39) 0322 918111, P.Iva IT02422810032.