Cisal
TEL. (+39) 0322 918111
MAIL. cisal@cisal.it

Single lever shower mixer, with shower set SLIM_SM000460



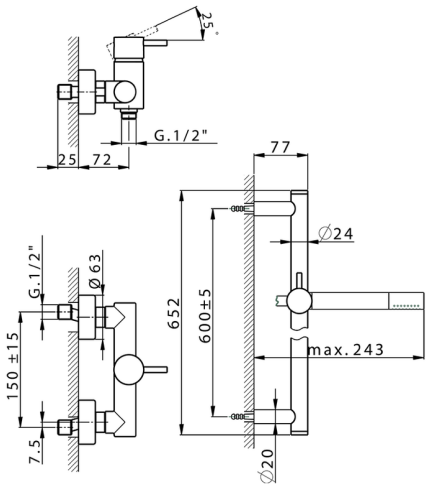

MODEL **SM000460**

Single lever shower mixer, with shower set,60 cm slide rail kit with sliding bracket,Brass minimalistic one spray handshower,150 cm SUPREME smooth flexible hose

AVAILABLE FINISHINGS

21 21 Chrome

2B 2B Polished Nickel

40 40 Matt Black

4Q 4Q Matt White

CHARACTERISTICS

Cartridge Spare Parts **ZZ95409000**

35 mm Cartridge

EcoStop

EcoStop feature limits water flow to approximately 50% of maximum output with one point of resistance on setting. Push slightly past the middle stop only when full water output is required. This will save water up to 50%.

2026-11-24

© 2021 Cisal. Via Pietro Durio 160 - 28010 - Alzo (NO) - Italia
Mail: cisal@cisal.it, Telefono: (+39) 0322 918111, P.Iva IT02422810032.