Cisal
TEL. (+39) 0322 918111
MAIL. cisal@cisal.it

Exposed part for Single Lever One Box Valve HI-RISE_RI0BM010

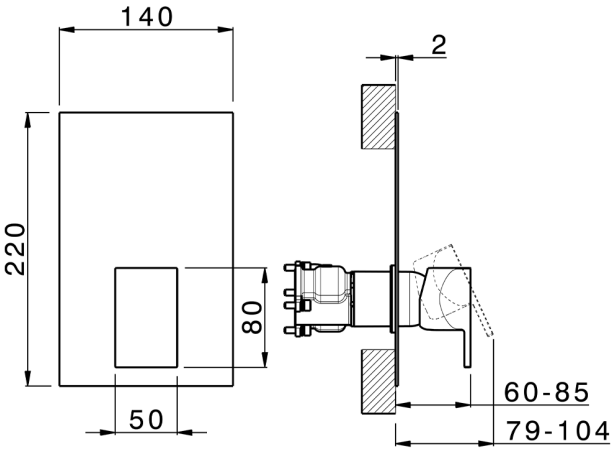

MODEL **RI0BM010**

Exposed part for Single Lever One Box Valve,1 Outlet,Minimum depth of installation: 67 mm,without concealed part,for items ZA00B030-ZA00B031

AVAILABLE FINISHINGS

- **21** 21 Chrome
- **24** 24 Gold
- **2F** 2F Brushed Nickel
- **2W** 2W Brushed Gold
- **40** 40 Matt Black
- **4Q** 4Q Matt White
- **5G** 5G Rose Gold
- **6V** 6V Matt White/Brushed Nickel
- **6X** 6X Matt White/Brushed Gold
- **7W** 7W Matt Black/Brushed Gold

CHARACTERISTICS

Cartridge Spare Parts	**ZZ97179000**
35 mm Cartridge	
Installation	**Concealed**

© 2021 Cisal. Via Pietro Durio 160 - 28010 - Alzo (NO) - Italia
Mail: cisal@cisal.it, Telefono: (+39) 0322 918111, P.Iva IT02422810032.

Required concealed parts **ZA00B031**

ZA00B030

Cisal
TEL. (+39) 0322 918111
MAIL. cisal@cisal.it

One Box Universal Concealed Part ONE BOX_ZA00B031

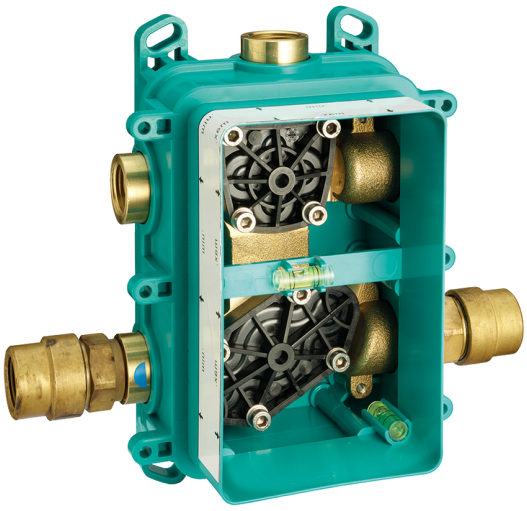

MODEL **ZA00B031**

One Box Universal Concealed Part,for 1,2 or 3 outlet thermostatic or single lever,without trim kit,with noise reducers,with sealing gasket

AVAILABLE FINISHINGS

04 04 Without finishing

CHARACTERISTICS

Concealed	**1**

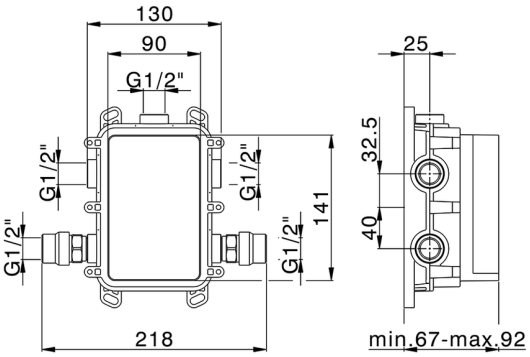

Thermostatic

The Cisal thermostatic is your personal water manager, helping you to handle, control and save water and energy.

© 2021 Cisal. Via Pietro Durio 160 - 28010 - Alzo (NO) - Italia
Mail: cisal@cisal.it, Telefono: (+39) 0322 918111, P.Iva IT02422810032.

Cisal
TEL. (+39) 0322 918111
MAIL. cisal@cisal.it

One Box Universal Concealed Part ONE BOX_ZA00B030

MODEL **ZA00B030**

One Box Universal Concealed Part,for 1,2 or 3 outlet thermostatic or single lever,without trim kit,without noise reducers,with sealing gasket

AVAILABLE FINISHINGS

04 04 Without finishing

CHARACTERISTICS

Concealed	**1**

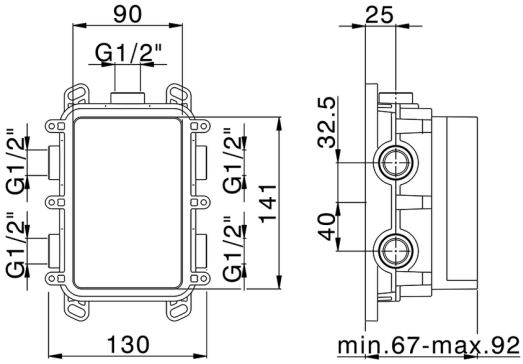

Thermostatic

The Cisal thermostatic is your personal water manager, helping you to handle, control and save water and energy.

2026-01-12

© 2021 Cisal. Via Pietro Durio 160 - 28010 - Alzo (NO) - Italia
Mail: cisal@cisal.it, Telefono: (+39) 0322 918111, P.Iva IT02422810032.