Cisal
TEL. (+39) 0322 918111
MAIL. cisal@cisal.it

Stopvalve exposed part NUOVA LESS_LN003310

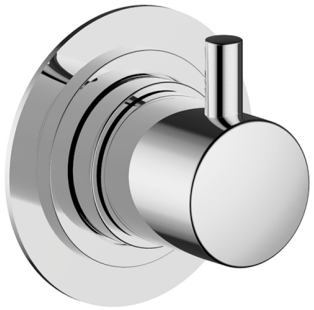

MODEL **LN003310**

Stopvalve exposed part,without concealed part,for item ZA003330-ZA003340

AVAILABLE FINISHINGS

21 21 Chrome

2F 2F Brushed Nickel

40 40 Matt Black

4Q 4Q Matt White

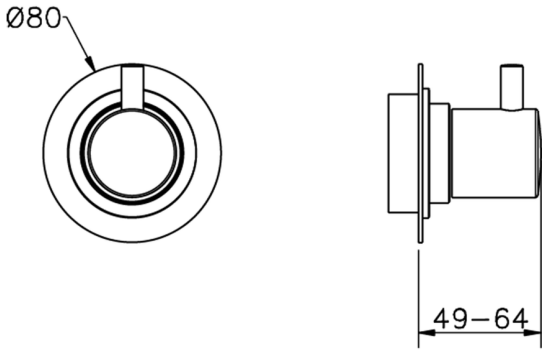

CHARACTERISTICS

Installation	**Concealed**
Required concealed parts	**ZA003340**
	ZA003330

© 2021 Cisal. Via Pietro Durio 160 - 28010 - Alzo (NO) - Italia
Mail: cisal@cisal.it, Telefono: (+39) 0322 918111, P.Iva IT02422810032.

Cisal
TEL. (+39) 0322 918111
MAIL. cisal@cisal.it

1/2 Stopvalve concealed part CONCEALED_ZA003340

MODEL **ZA003340**

1/2" Stopvalve concealed part,opening counterclockwise

AVAILABLE FINISHINGS

04 04 Without finishing

CHARACTERISTICS

Concealed	**1**

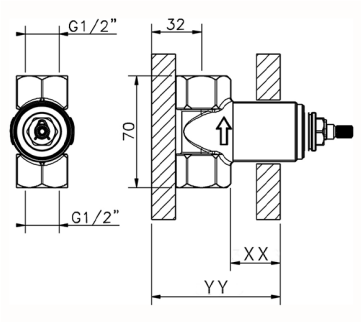

Piastra/Plate/Plaque/Platte/Placa
2-3mm: XX 31-46 YY 80-95
10mm: XX 25-40 YY 76-91

© 2021 Cisal. Via Pietro Durio 160 - 28010 - Alzo (NO) - Italia
Mail: cisal@cisal.it, Telefono: (+39) 0322 918111, P.Iva IT02422810032.

Cisal
TEL. (+39) 0322 918111
MAIL. cisal@cisal.it

3/4 Stopvalve concealed part CONCEALED_ZA003330

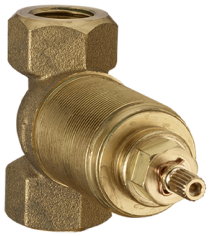

MODEL **ZA003330**

3/4" Stopvalve concealed part,opening counterclockwise

AVAILABLE FINISHINGS

04 04 Without finishing

CHARACTERISTICS

Concealed	**1**

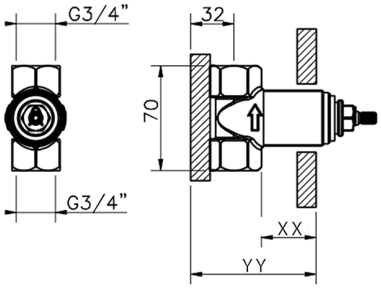

Piastra/Plate/Plaque/Platte/Placa
2-3mm: XX 31-46 YY 80-95
10mm: XX 25-40 YY 76-91

2026-03-15

© 2021 Cisal. Via Pietro Durio 160 - 28010 - Alzo (NO) - Italia
Mail: cisal@cisal.it, Telefono: (+39) 0322 918111, P.Iva IT02422810032.