Cisal
TEL. (+39) 0322 918111
MAIL. cisal@cisal.it

2-functions Thermostatic shower set SHOWER COLUMNS_SMC78010

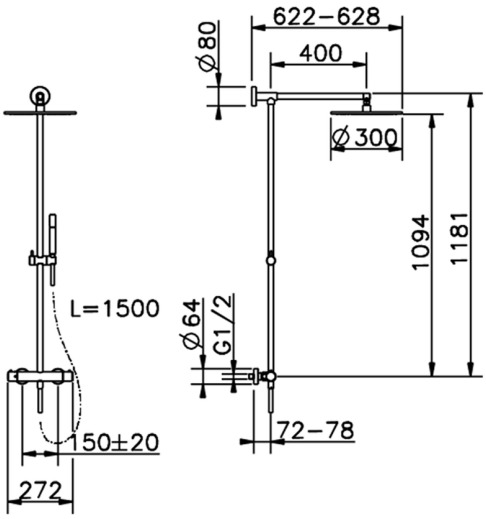

MODEL **SMC78010**

2-functions Thermostatic shower set,2 outlets deviastop,not adjustable column,sliding shower bracket,Brass minimalistic one spray handshower,300 mm round showerhead 8 mm thick BRASS,150 cm smooth SUPREME Flexible Hose

AVAILABLE FINISHINGS

21 21 Chrome

2B 2B Polished Nickel

40 40 Matt Black

4Q 4Q Matt White

CHARACTERISTICS

Cartridge Spare Parts **24.04A.PP**

8x20 Plus P Thermostatic Valve

DeviaStop

The Cisal Devia Stop technology allows to adjust the water flow and to direct it to the selected output point (overhead soaker, hand shower, etc).

Thermostatic

The Cisal thermostatic is your personal water manager, helping you to handle, control and save water and energy.

2026-04-07

© 2021 Cisal. Via Pietro Durio 160 - 28010 - Alzo (NO) - Italia
Mail: cisal@cisal.it, Telefono: (+39) 0322 918111, P.Iva IT02422810032.