Cisal
TEL. (+39) 0322 918111
MAIL. cisal@cisal.it

Concealed thermostatic shower mixer ROADSTER ACCENT_RA0KT010

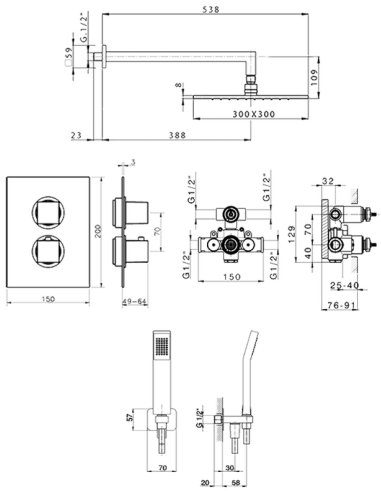

MODEL **RA0KT010**

Concealed thermostatic shower mixer,1/2" Concealed Thermostatic Mixer,2 outlet deviastop cartridge,wall mounted adjustable handshower bracket,400 mm shower arm with headshower,300x300 mm square showerhead 8 mm thick,42x18 mm ABS Quad one spray handshower,1/2" wall elbow,150 cm smooth SILVERFLEX Flexible Hose

AVAILABLE FINISHINGS

21 21 Chrome

CHARACTERISTICS

Cartridge Spare Parts **24.04A.PP**

8x20 Plus P Thermostatic Valve

DeviaStop

The Cisal Devia Stop technology allows to adjust the water flow and to direct it to the selected output point (overhead soaker, hand shower, etc).

Thermostatic

The Cisal thermostatic is your personal water manager, helping you to handle, control and save water and energy.

2026-04-26

© 2021 Cisal. Via Pietro Durio 160 - 28010 - Alzo (NO) - Italia
Mail: cisal@cisal.it, Telefono: (+39) 0322 918111, P.Iva IT02422810032.