Cisal
TEL. (+39) 0322 918111
MAIL. cisal@cisal.it

Fixed heated towel rail Ø18mm BATHROOM ACCESSORIES_ZA004920

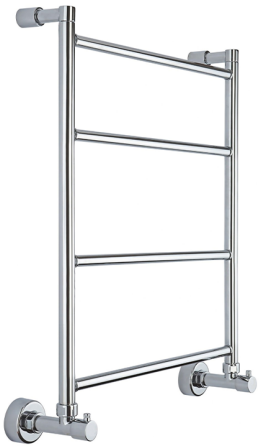

MODEL **ZA004920**

Fixed heated towel rail Ø18mm,1/2 M with eccentric union,Brass

AVAILABLE FINISHINGS

21 21 Chrome

CHARACTERISTICS

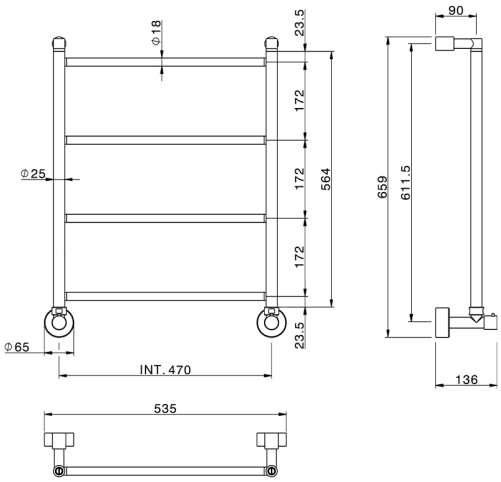

2026-03-18

© 2021 Cisal. Via Pietro Durio 160 - 28010 - Alzo (NO) - Italia
Mail: cisal@cisal.it, Telefono: (+39) 0322 918111, P.Iva IT02422810032.