Cisal
TEL. (+39) 0322 918111
MAIL. cisal@cisal.it

3 hole washbasin mixer CUBIC_CU001020

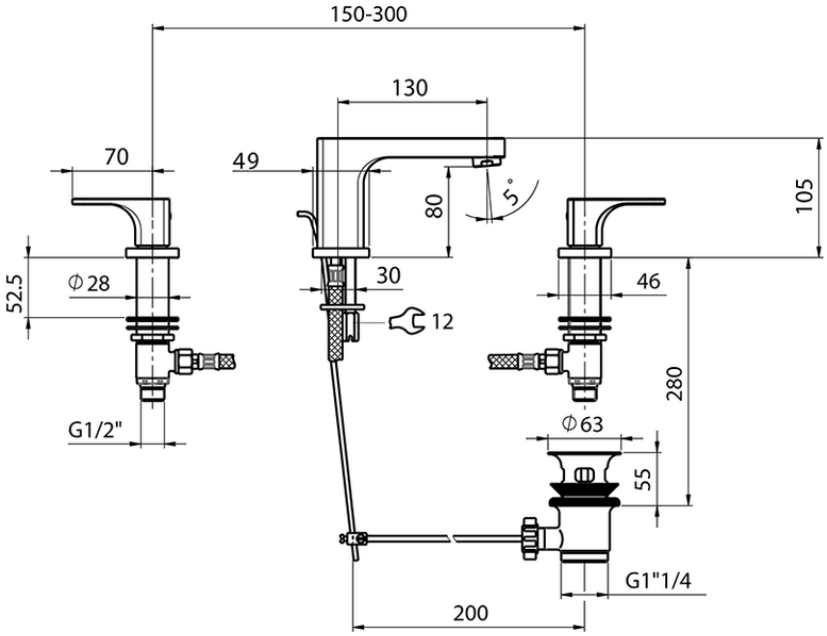

CU001020

https://en.cisal.it/3-hole-washbasin-mixer-cubic-cu001020

2026-06-13

© 2021 Cisal. Via Pietro Durio 160 - 28010 - Alzo (NO) - Italia
Mail: cisal@cisal.it, Telefono: (+39) 0322 918111, P.Iva IT02422810032.