Cisal
TEL. (+39) 0322 918111
MAIL. cisal@cisal.it

3 hole washbasin mixer CUBIC_CU001020

MODEL **CU001020**

3 hole washbasin mixer,with automatic 1"1/4 automatic pop-up waste

AVAILABLE FINISHINGS

21 21 Chrome

2B 2B Polished Nickel

2F 2F Brushed Nickel

40 40 Matt Black

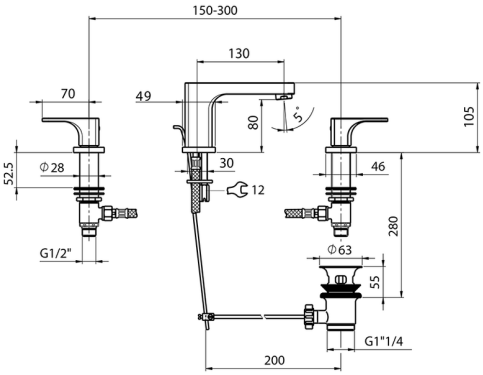

CHARACTERISTICS

2026-04-08

© 2021 Cisal. Via Pietro Durio 160 - 28010 - Alzo (NO) - Italia
Mail: cisal@cisal.it, Telefono: (+39) 0322 918111, P.Iva IT02422810032.