Cisal
TEL. (+39) 0322 918111
MAIL. cisal@cisal.it

Exposed part for con.thermo.shower mixer 1-outlet WAVE_WA009300

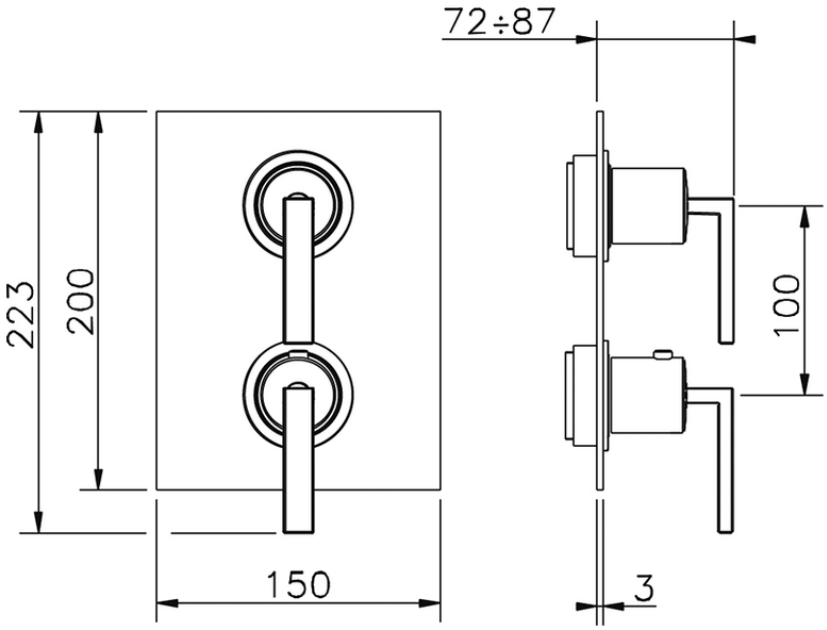

WA009300 https://en.cisal.it/exposed-part-for-con-thermo-shower-mixer-1-outlet-wave-wa009300

© 2021 Cisal. Via Pietro Durio 160 - 28010 - Alzo (NO) - Italia
Mail: cisal@cisal.it, Telefono: (+39) 0322 918111, P.Iva IT02422810032.

Cisal
TEL. (+39) 0322 918111
MAIL. cisal@cisal.it

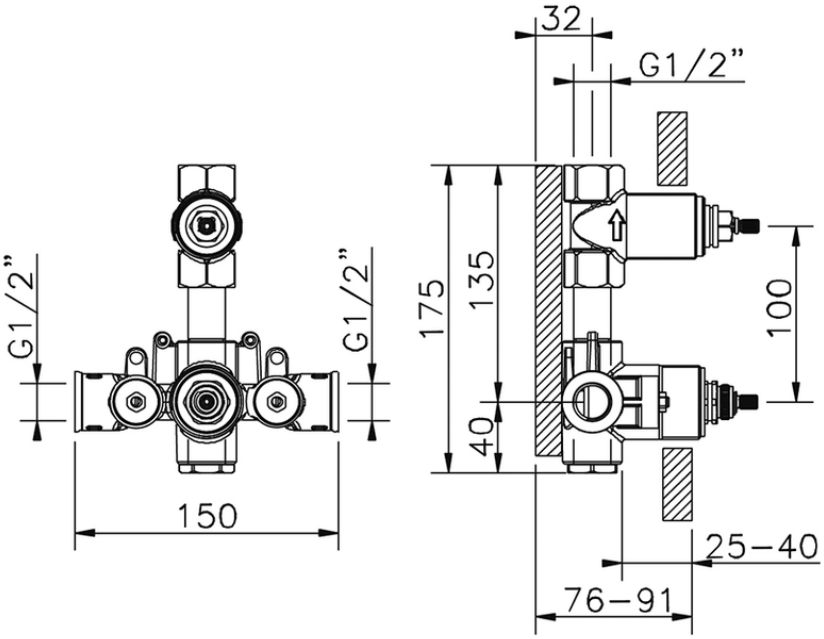

ZA009301 https://en.cisal.it/concealed-thermostatic-shower-mixer-1-outlet-concealed-za009301

2026-01-11

© 2021 Cisal. Via Pietro Durio 160 - 28010 - Alzo (NO) - Italia
Mail: cisal@cisal.it, Telefono: (+39) 0322 918111, P.Iva IT02422810032.