Cisal
TEL. (+39) 0322 918111
MAIL. cisal@cisal.it

Single lever 'large' washbasin mixer MARBLE X32_X6000504

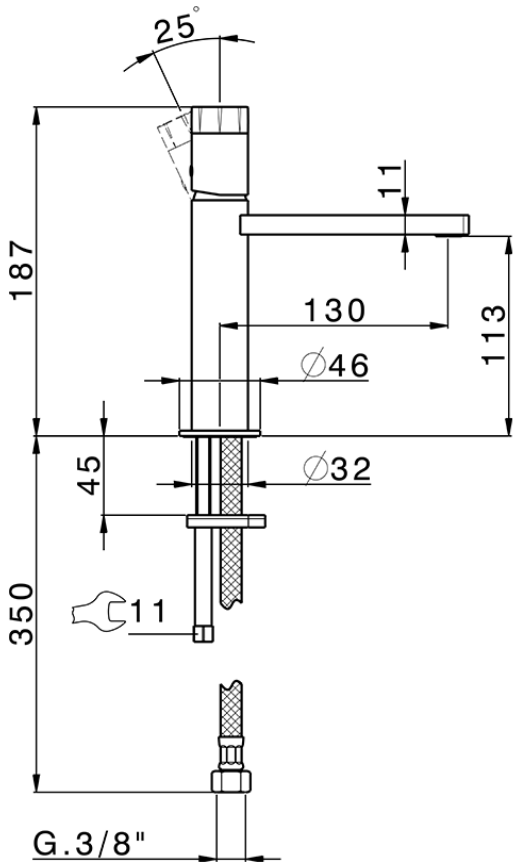

X6000504

https://en.cisal.it/single-lever-large-washbasin-mixer-marble-x32-x6000504

2026-04-26

© 2021 Cisal. Via Pietro Durio 160 - 28010 - Alzo (NO) - Italia
Mail: cisal@cisal.it, Telefono: (+39) 0322 918111, P.Iva IT02422810032.