Cisal
TEL. (+39) 0322 918111
MAIL. cisal@cisal.it

Exposed part for concealed S.L.bath-shower valve ROCK&ROLL_RK002300



MODEL **RK002300**

Exposed part for concealed S.L.bath-shower valve,2-Way rotating diverter,without concealed part,for items Easy-Box ZA000230

AVAILABLE FINISHINGS

21 21 Chrome

2F 2F Brushed Nickel

40 40 Matt Black

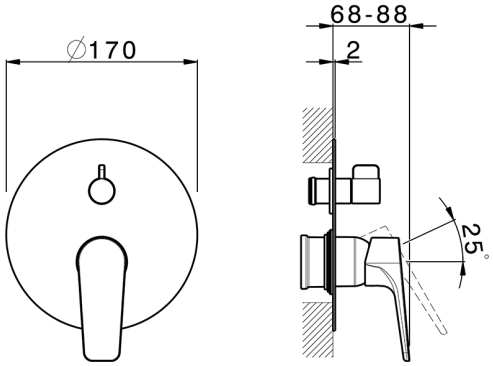

CHARACTERISTICS

Installation	**Concealed**
Required concealed parts	**ZA000230**

© 2021 Cisal. Via Pietro Durio 160 - 28010 - Alzo (NO) - Italia
Mail: cisal@cisal.it, Telefono: (+39) 0322 918111, P.Iva IT02422810032.

Cisal
TEL. (+39) 0322 918111
MAIL. cisal@cisal.it

Exposed part for concealed S.L.bath-shower valve ROCK&ROLL_RK002300

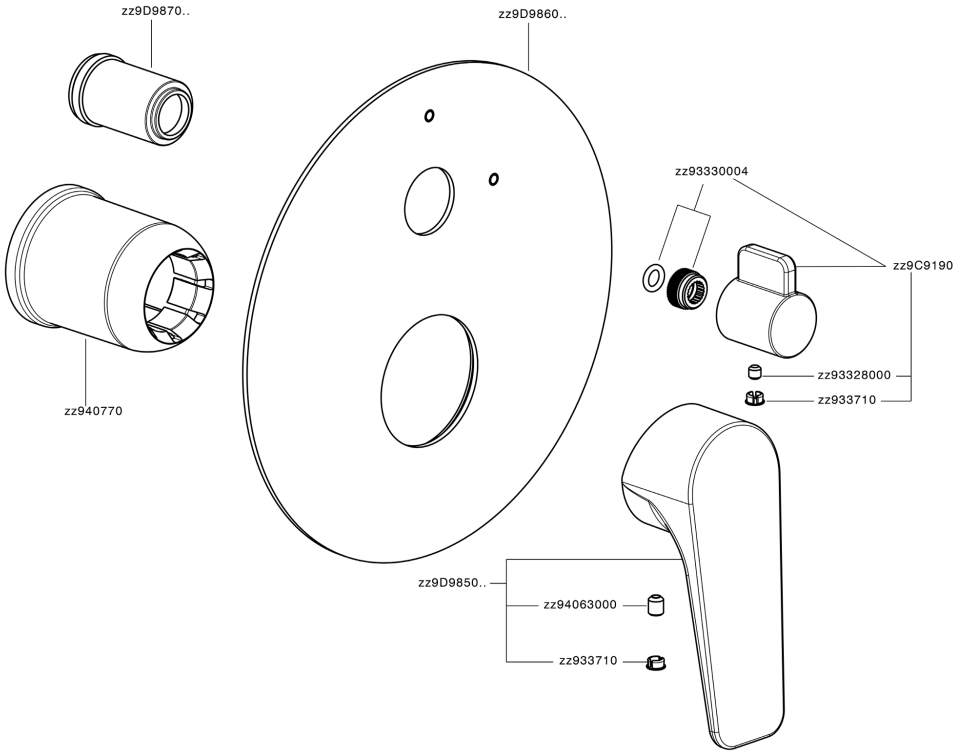

RK002300 https://en.cisal.it/exposed-part-for-concealed-s-l-bath-shower-valve-rockroll-rk002300

2026-11-25

© 2021 Cisal. Via Pietro Durio 160 - 28010 - Alzo (NO) - Italia
Mail: cisal@cisal.it, Telefono: (+39) 0322 918111, P.Iva IT02422810032.