Single lever sink mixer with extrac.shower ARCANA EMPRESS_EM002570

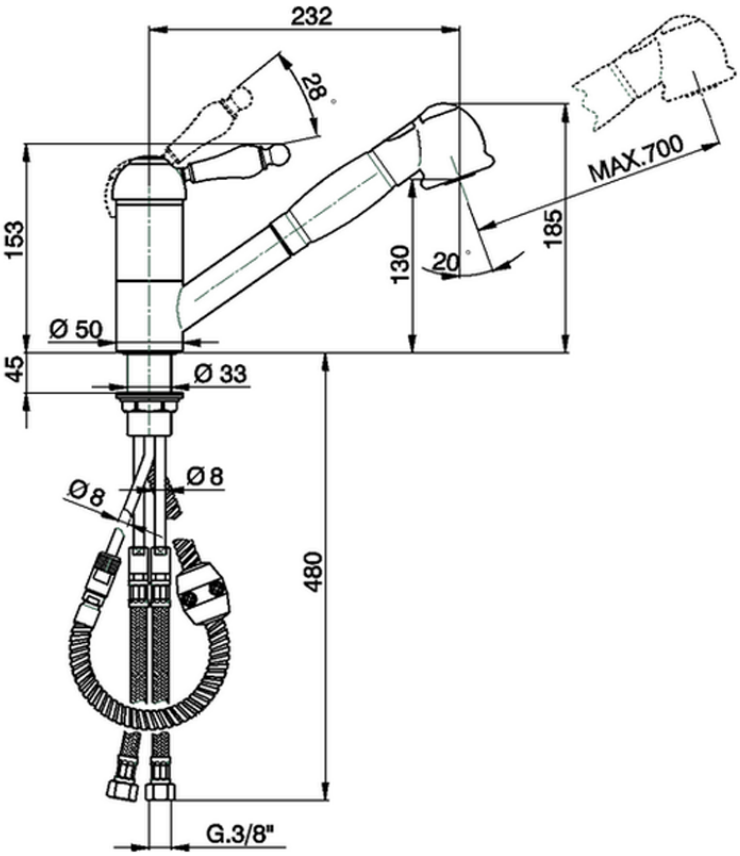

EM002570 https://en.cisal.it/single-lever-sink-mixer-with-extrac-shower-arcana-empress-em002570

2026-04-24