Cisal
TEL. (+39) 0322 918111
MAIL. cisal@cisal.it

Bidet handshower set HYGENIC SHOWERS_FL007900

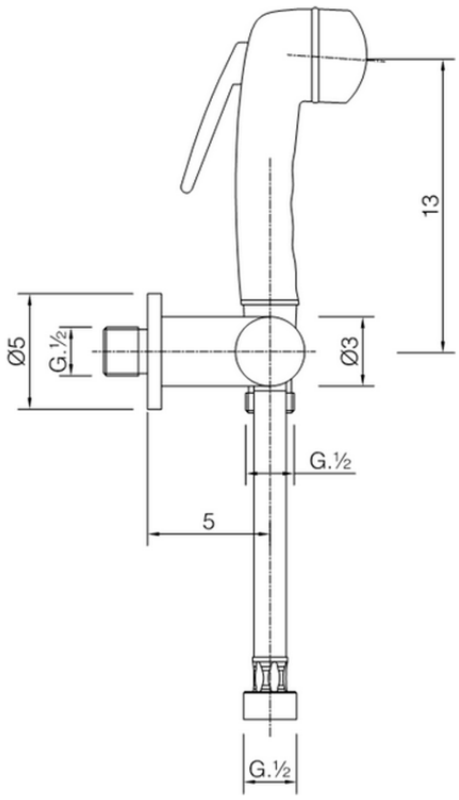

FL007900

https://en.cisal.it/bidet-handshower-set-hygenic-showers-fl007900

2026-06-26

© 2021 Cisal. Via Pietro Durio 160 - 28010 - Alzo (NO) - Italia
Mail: cisal@cisal.it, Telefono: (+39) 0322 918111, P.Iva IT02422810032.