Cisal
TEL. (+39) 0322 918111
MAIL. cisal@cisal.it

Ring shaped towel holder ARCANA COMPONENTS_AR090220

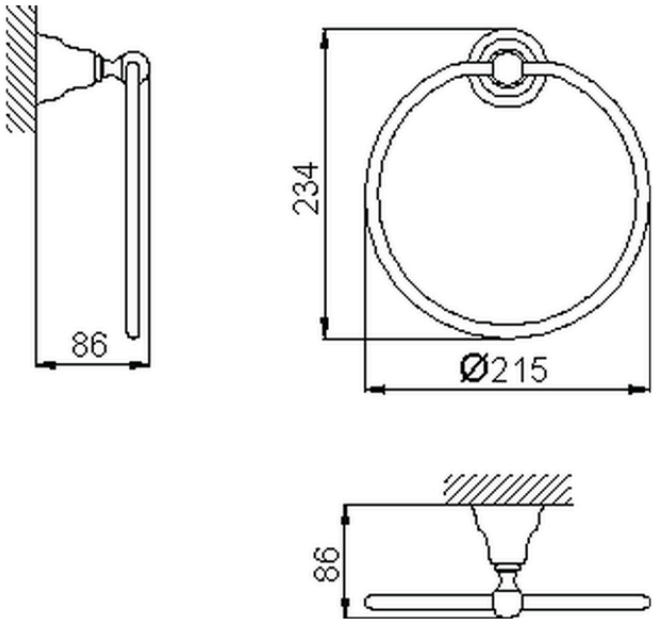

AR090220

https://en.cisal.it/ring-shaped-towel-holder-arcana-components-ar090220

2026-01-11

© 2021 Cisal. Via Pietro Durio 160 - 28010 - Alzo (NO) - Italia
Mail: cisal@cisal.it, Telefono: (+39) 0322 918111, P.Iva IT02422810032.