Cisal
TEL. (+39) 0322 918111
MAIL. cisal@cisal.it

# Exposed single lever sink mixer KITCHEN_CL000401

cisal

## CL 00040

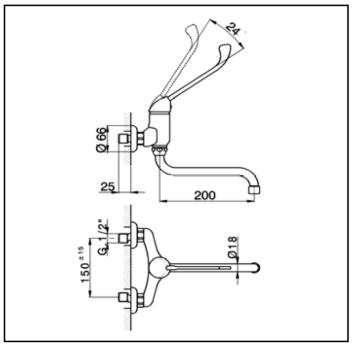


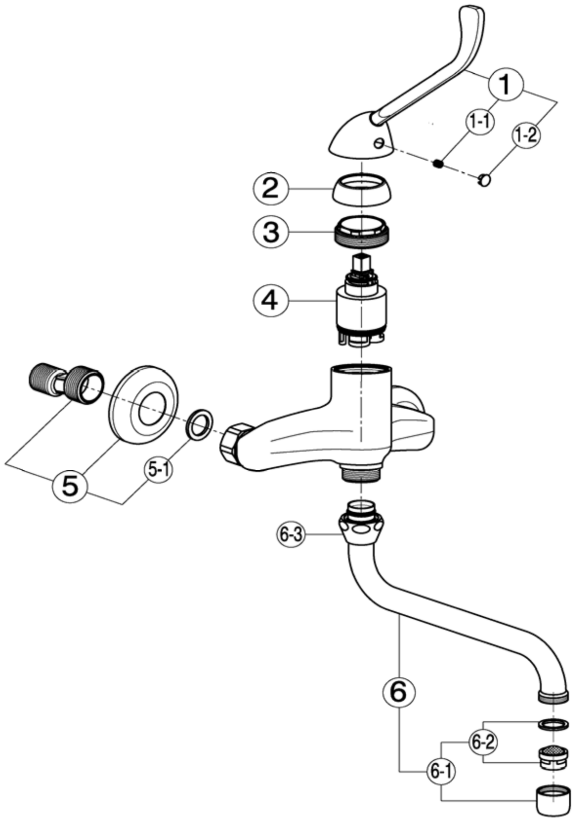


| NR. | DESCRIZIONE<br>DESCRIPTION<br>BESCREIBUNG<br>DESCRIPTION | N.CODICE<br>CODE NO.<br>WERSKNR.<br>NR.CODE |
|---|---|---|
| 1 | Leva monocomando "CL"<br>Lever "CL"<br>Hebel "CL"<br>Levier "CL" | ZA005020 |
| 1-1 | Grano punta coppa inox M.5x6<br>Screw-stainless steel M.5x6<br>Madenschraube M.5x6<br>Vis speciale inox M.5x6 | ZZ940630 |
| 1-2 | Placchetta per leva<br>Cap for lever<br>Abdeckkappe f/Hebel<br>Plaquette levier | ZZ927100 |
| 2 | Copricartuccia senza ideogrammi<br>Escutcheon catridge without ideogram<br>Abdeckkappe ohne Ideogramm<br>Couvre-cartouche sans ideogramme | ZZ940650 |
| 3 | Calotta bloccaggio cartuccia<br>Nut for mixing valve<br>Mutter f/kartusche<br>Ecrou pour cartouche | ZZ940660 |
| 4 | Cartuccia monocomando<br>Mixing valve<br>Kartusche<br>Cartouche mitigeurs | ZZ940340 |

| NR. | DESCRIZIONE<br>DESCRIPTION<br>BESCREIBUNG<br>DESCRIPTION | N.CODICE<br>CODE NO.<br>WERSKNR.<br>NR.CODE |
|---|---|---|
| 5 | Eccentrico con rosone<br>Excentric connection with escutcheon<br>S - Anschluss m.Rosette<br>Excentrique + rosace | ZZ927300 |
| 5-1 | Guarnizione NBR 90 SH. 24x16x2,7<br>Gasket NBR 90 SH. 24x16x2,7<br>Dichtung NBR 90 SH. 24x16x2,7<br>Joint NBR 90 SH. 24x16x2,7 | ZZ926890 |
| 6 | Canna a S Ø18 interasse 200<br>Swinging spout 200 Ø18<br>Auslauf-Rohr-S-200 Ø18<br>Bec orientable 200 Ø18 | ZZ928220 |
| 6-1 | Aeratore M.22x1 IA<br>Mousseur M.22x1 IA<br>Perlator M.22x1 IA<br>Mousseur M.22x1 IA | ZZ928350 |
| 6-2 | Cartuccia per aeratore M. 22x1<br>Mousseur cartridge M.22x1<br>Kart.f/Perlator M.22x1<br>Cartouche x mousseur M.22x1 | ZZ927080 |
| 6-3 | Calotta 3/4" es.29 Ø19,5<br>Nut 3/4" Ø19,5<br>Mutter 3/4" Ø19,5<br>Ecrou 3/4" Ø19,5 | ZZ926150 |

| NR. | DESCRIZIONE<br>DESCRIPTION<br>BESCREIBUNG<br>DESCRIPTION | N.CODICE<br>CODE NO.<br>WERSKNR.<br>NR.CODE |
|---|---|---|

CL000401 https://en.cisal.it/exposed-single-lever-sink-mixer-kitchen-cl000401

2026-05-19

© 2021 Cisal. Via Pietro Durio 160 - 28010 - Alzo (NO) - Italia
Mail: cisal@cisal.it, Telefono: (+39) 0322 918111, P.Iva IT02422810032.