Cisal
TEL. (+39) 0322 918111
MAIL. cisal@cisal.it

Single lever bidet mixer SMOOTH X32_X4000564

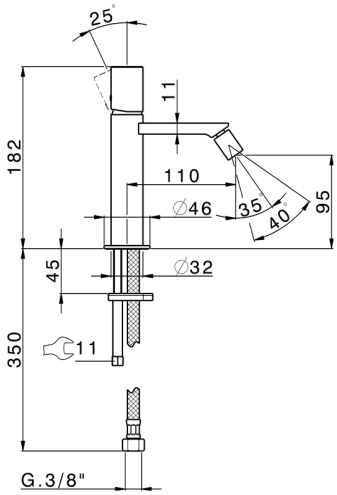

MODEL **X4000564**

Single lever bidet mixer,without pop up waste,G.3/8" Stainless Steel Flexible,with smooth lever,Inox AISI 316L

AVAILABLE FINISHINGS

D1 D1 Brushed Inox

5H 5H Dark Brass Brushed

5L 5L Brushed Black Titanium

5N 5N Brushed Rose Gold

CHARACTERISTICS

Cartridge Spare Parts **ZZ96550000**

25 mm Cartridge

© 2021 Cisal. Via Pietro Durio 160 - 28010 - Alzo (NO) - Italia
Mail: cisal@cisal.it, Telefono: (+39) 0322 918111, P.Iva IT02422810032.

Cisal
TEL. (+39) 0322 918111
MAIL. cisal@cisal.it

Single lever bidet mixer SMOOTH X32_X4000564

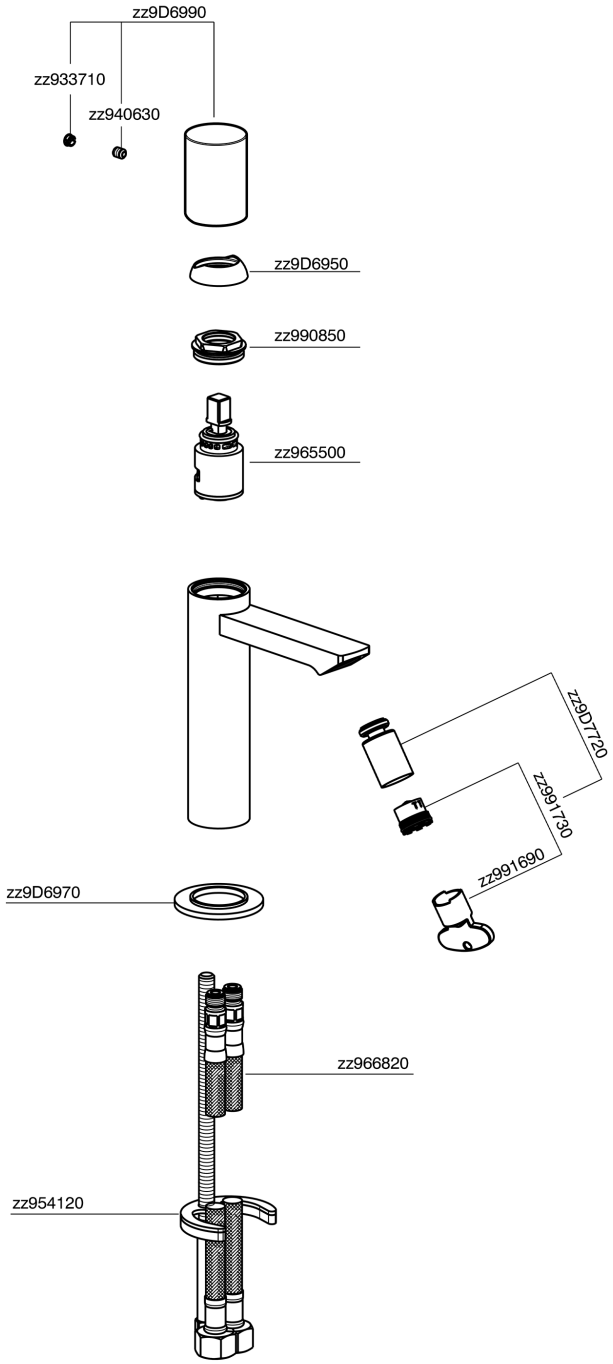

X4000564

https://en.cisal.it/single-lever-bidet-mixer-smooth-x32-x4000564

2026-03-15

© 2021 Cisal. Via Pietro Durio 160 - 28010 - Alzo (NO) - Italia
Mail: cisal@cisal.it, Telefono: (+39) 0322 918111, P.Iva IT02422810032.