Cisal
TEL. (+39) 0322 918111
MAIL. cisal@cisal.it

Thermostatic bath mixer, with shower set CHERIE_CED28010

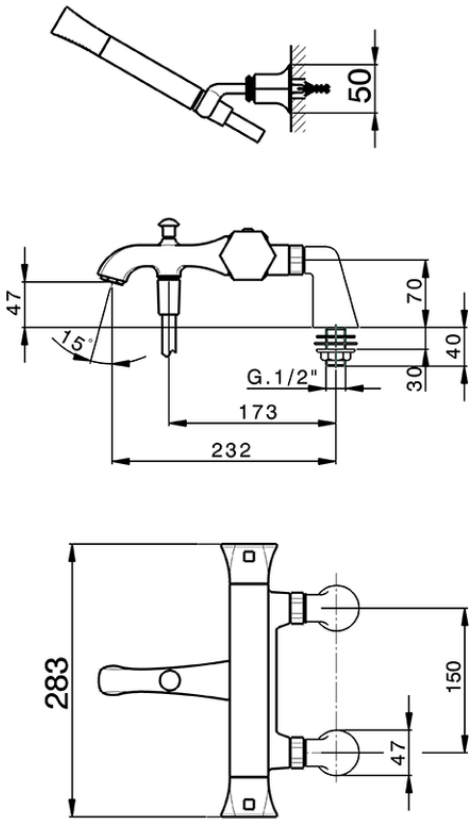

CED28010

https://en.cisal.it/thermostatic-bath-mixer-with-shower-set-cherie-ced28010

2026-03-13

© 2021 Cisal. Via Pietro Durio 160 - 28010 - Alzo (NO) - Italia
Mail: cisal@cisal.it, Telefono: (+39) 0322 918111, P.Iva IT02422810032.