Cisal
TEL. (+39) 0322 918111
MAIL. cisal@cisal.it

Bidet handshower set HYGENIC SHOWERS_AR007945

MODEL **AR007945**

Bidet handshower set,round wall bracket,gradual mixing of hot&cold water,with concealed part,Brass Bidet handshower - 120 cm PVC flexible hose

AVAILABLE FINISHINGS

21 21 Chrome

2P 2P Rose Gold

CHARACTERISTICS

Bidet handshower

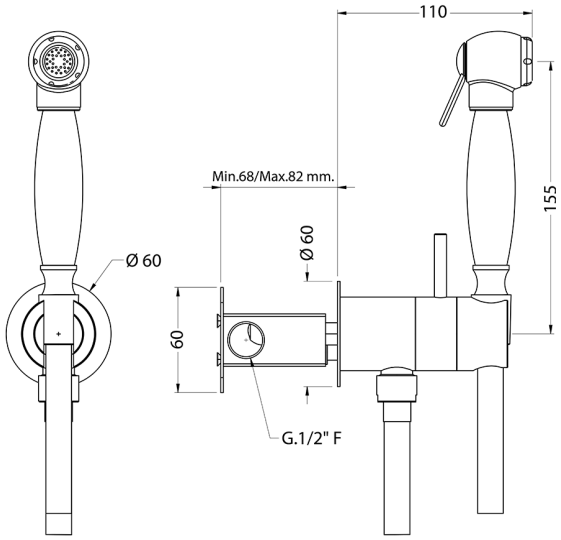

Hygienic Spray

Multi-jets hygienic hand shower, for personal hygiene care.

MixedWater

The Cisal Mixed Water system enables the gradual mixing of hot and cold water.

2026-03-17

© 2021 Cisal. Via Pietro Durio 160 - 28010 - Alzo (NO) - Italia
Mail: cisal@cisal.it, Telefono: (+39) 0322 918111, P.Iva IT02422810032.