Cisal
TEL. (+39) 0322 918111
MAIL. cisal@cisal.it

Exposed part for single lever washbasin valve CUBIC_CU005514

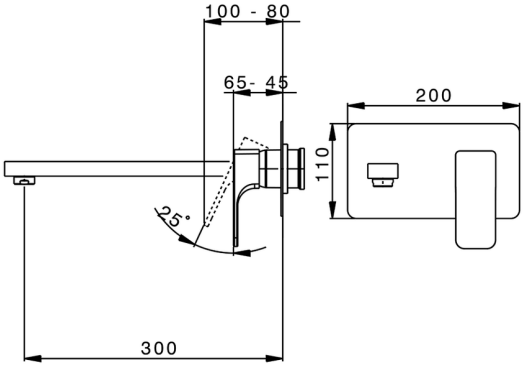

MODEL **CU005514**

Exposed part for single lever washbasin valve,without concealed part,spout L.300 mm,for item Easy-Box ZA002450-ZA025510

AVAILABLE FINISHINGS

21 21 Chrome

2B 2B Polished Nickel

2F 2F Brushed Nickel

40 40 Matt Black

CHARACTERISTICS

Installation	**Concealed**
Required concealed parts	**ZA002450**

2026-03-16

© 2021 Cisal. Via Pietro Durio 160 - 28010 - Alzo (NO) - Italia
Mail: cisal@cisal.it, Telefono: (+39) 0322 918111, P.Iva IT02422810032.