Cisal
TEL. (+39) 0322 918111
MAIL. cisal@cisal.it

Single lever basin mixer CUBIC_CU000511

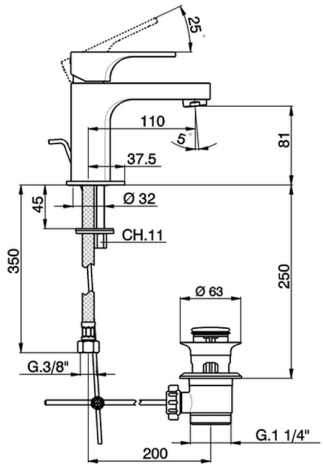

MODEL **CU000511**

Single lever basin mixer,with automatic 1"1/4 automatic pop-up waste,G.3/8" stainless steel flexible hoses

AVAILABLE FINISHINGS

21 21 Chrome

2B 2B Polished Nickel

2F 2F Brushed Nickel

40 40 Matt Black

CHARACTERISTICS

Cartridge Spare Parts **ZZ94240000**

25 mm Cartridge

© 2021 Cisal. Via Pietro Durio 160 - 28010 - Alzo (NO) - Italia
Mail: cisal@cisal.it, Telefono: (+39) 0322 918111, P.Iva IT02422810032.

Cisal
TEL. (+39) 0322 918111
MAIL. cisal@cisal.it

Single lever basin mixer CUBIC_CU000511

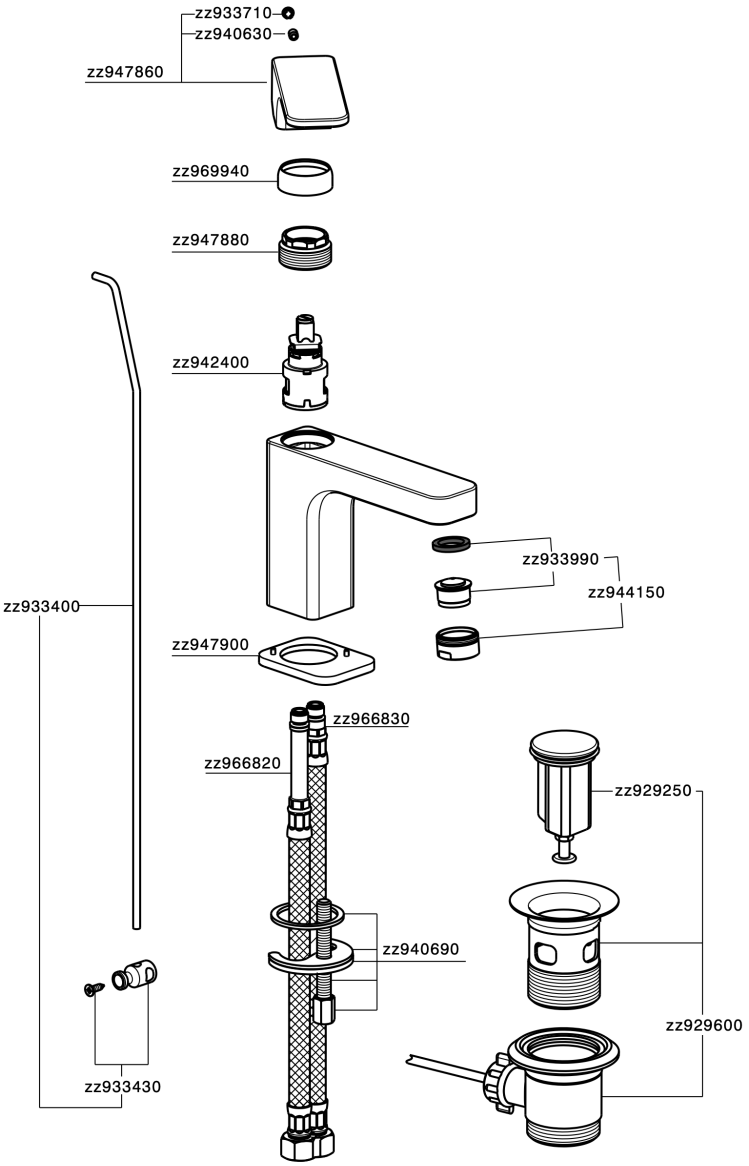

CU000511

https://en.cisal.it/single-lever-basin-mixer-cubic-cu000511

2026-08-11

© 2021 Cisal. Via Pietro Durio 160 - 28010 - Alzo (NO) - Italia
Mail: cisal@cisal.it, Telefono: (+39) 0322 918111, P.Iva IT02422810032.