Cisal
TEL. (+39) 0322 918111
MAIL. cisal@cisal.it

Bath-shower mixer, 3-functions ARCANA CERAMIC_AC004151

cisal

AC 00415 1

da Febbraio 2009 - from February 2009
ab Februar 2009 - de Février 2009

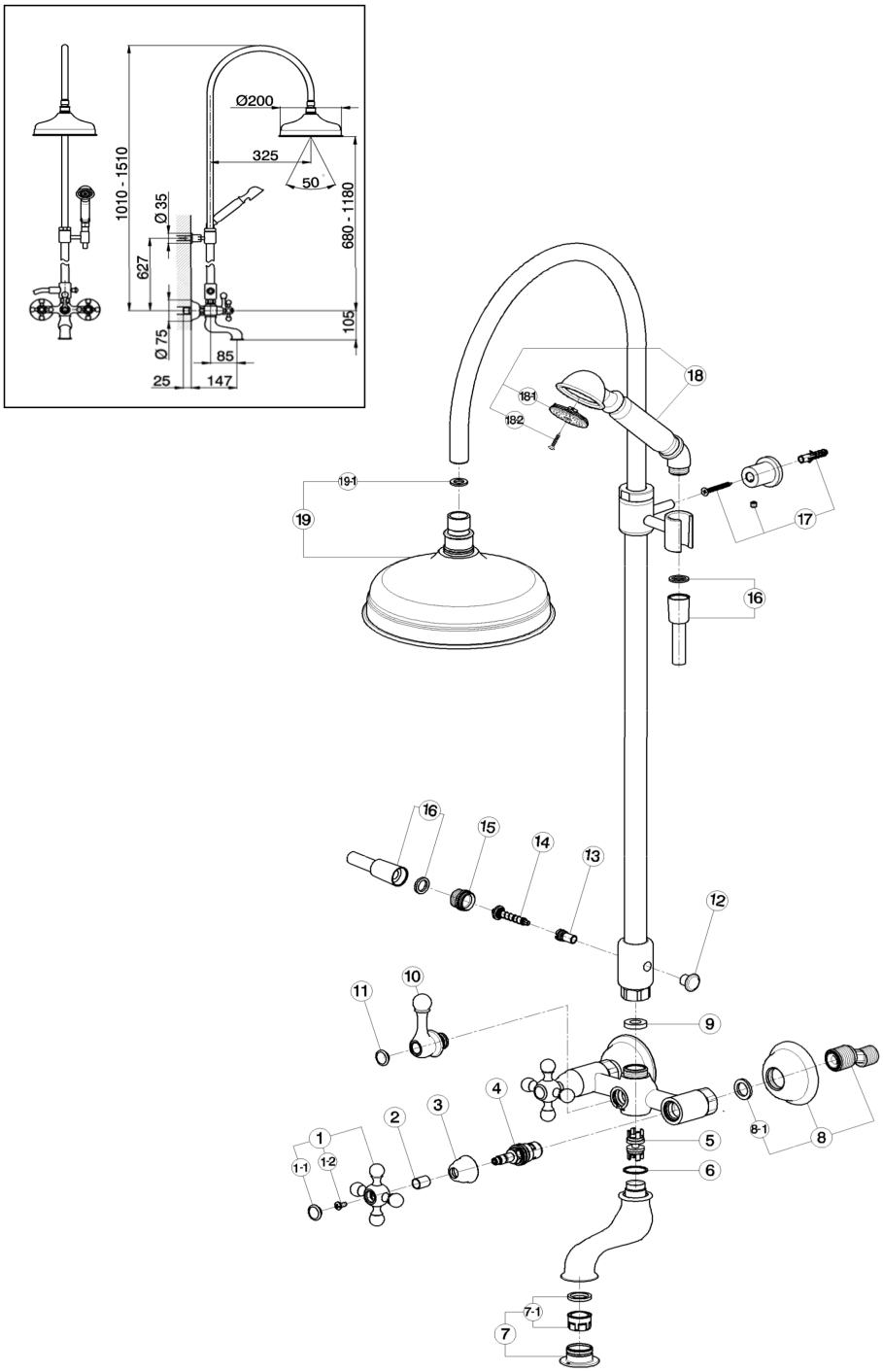

AC004151

https://en.cisal.it/bath-shower-mixer-3-functions-arcana-ceramic-ac004151

© 2021 Cisal. Via Pietro Durio 160 - 28010 - Alzo (NO) - Italia
Mail: cisal@cisal.it, Telefono: (+39) 0322 918111, P.Iva IT02422810032.

Bath-shower mixer, 3-functions ARCANA CERAMIC_AC004151

cisal

AC 00415 1

da Febbraio 2009 - from February 2009
ab Februar 2009 - de Février 2009

NR.	DESCRIZIONE DESCRIPTION BESCREIBUNG DESCRIPTION	N.CODICE CODE NO. WERSKNR. NR.CODE
1	Maniglia AR con vite e placchetta Croisillon AR avec vis et plaquette Handle AR Griff AR mit Schraube	ZZ903070
1-1	Placchetta a vite maniglia AR Plaquette cache vis croisillon AR Cap for handle AR Abdeckkappe AR Griff	ZZ926170
1-2	Vite M.4,5x10 tb.tc zigrinata Vis M.4,5x10 Screw M.4,5x10 Schraube M.4,5x10	ZZ926090
2	Tubetto copriasta AR H.15,5 Tube couvre tete AR H.15,5 Sliding cover tube "AR" Abdeckkappe Oberteil AR H.15,5	ZZ926190
3	Cappuccio coprivitone Ø32 H.21 AC Rosace couvre tete Ø32 H.21 AC Escutcheon Ø32 H.21 AC headvalve Abdeckkappe Ø32 H.21 AC	ZZ926520
4	Vitone cer. DX per monof. e gruppi AC Tete ceramique 1/2" droite AC Courte Ceramic headvalve 1/2" right AC short Keramikoberteil 1/2" rechts AC kurz	ZZ928580
5	Valvola deviazione per gruppo vasca Tete pour inverseur Diverting valve for bath mixer Umstellungsventil	ZZ927790
6	Guarnizione fibra 26x22,5x1 Joint en fibre 26x22,5x1 Gasket rubber 26x22,5x1 Fiberdichtung 26x22,5x1	ZZ926920
7	Bordino con aeratore M. 28x1 "AR" Garniture avec mousseur M.28x1 "AR" Overfill with mousseur M.28x1 "AR" Perlator M.28x1 "AR"	ZZ927840

NR.	DESCRIZIONE DESCRIPTION BESCREIBUNG DESCRIPTION	N.CODICE CODE NO. WERSKNR. NR.CODE
7-1	Cartuccia per aeratore M.28x1 Cartouche pour mousseur M.28x1 Mousseur cartridge M.28x1 Kartusche fuer Perlator M.28x1	ZZ926940
8	Eccentrico con rosone "AC" Excentrique + rosace "AC" Excentric connect. with escutch. "AC" S - Anschluss m.Rosette "AC"	ZZ928260
8-1	Guarnizione NBR 90 SH. 24x16x2,7 Joint NBR 90 SH. 24x16x2,7 Gasket NBR 90 SH. 24x16x2,7 Dichtung NBR 90 SH. 24x16x2,7	ZZ926890
9	Guarnizione NBR 90 SH. 24x16x2,7 Joint NBR 90 SH. 24x16x2,7 Gasket NBR 90 SH. 24x16x2,7 Dichtung NBR 90 SH. 24x16x2,7	ZZ926890
10	Deviatore gruppo vasca AR Inverseur bain/douche AR Diverter AR Wannenbatterieumsteller	ZZ902570
11	Placchetta a vite maniglia AR Plaquette cache vis croisillon AR Cap for handle AR Abdeckkappe AR Griff	ZZ926170
12	Pomolo per deviazione Pommeau pour inverseur Knob for diverter Zugknopf Umsteller	ZZ933940
13	Corpo deviazione automatica Corps inverseur automatique Body for authomatic diverter Körper für automatische Umstellung	ZZ949860
14	Asta deviazione completa Tige inverseur compète Complete diverting rod Umstellung	ZZ933140

NR.	DESCRIZIONE DESCRIPTION BESCREIBUNG DESCRIPTION	N.CODICE CODE NO. WERSKNR. NR.CODE
15	Attacco flessibile Raccord flex Flexible connection Flex Anschluss	ZZ931410
16	Flessibile D.14x150 1/2" conico x 1/2" Flexible D.14x150 avec raccord 1/2" Hose D.14x150 1/2"x1/2" Schlauch D.14x150 1/2" Konus x 1/2"	ZA009030
17	Set installazione asta doccia Set installation colonne de douche Installation set for sliding bar Installationsset für Wandstange	ZZ949870
18	Doccia Arcana Douchette Arcana Arcana handshower Handbrause Arcana	DS014110
18-1	Diffusore doccia AR Aerateur douche AR Aerator for showers AR Zerstaeuber fuer Brause AR	ZZ905440
18-2	Vite di fissaggio diffusore per doccia Vis de fixation diffuseur pour douchette Fixing screw for spray kit handshower Befestigungsschraube fuer Einsatz	ZZ934010
19	Soffione doccia Pomme de douche Headshower Kopfbrause	DS016140
19-1	Guarnizione fibra 18,5x11x2 Joint en fibre 18,5x11x2 Gasket rubber 18,5x11x2 Fiberdichtung 18,5x11x2	ZZ927140

AC004151 https://en.cisal.it/bath-shower-mixer-3-functions-arcana-ceramic-ac004151

2026-01-11