Cisal
TEL. (+39) 0322 918111
MAIL. cisal@cisal.it

Single Lever concealed shower set CUBIC_CU0KM030

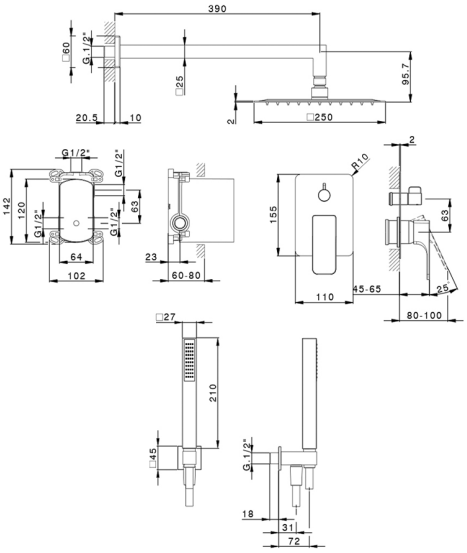

MODEL **CU0KM030**

Single Lever concealed shower set,2-Way rotating diverter,wall mounted handshower bracket with wall elbow,400 mm shower arm,250x250 mm INOX square showerhead 2 mm thick,27x27 mm one spray minimalist square handshower,1/2" wall elbow,150 cm smooth SILVERFLEX Flexible Hose

AVAILABLE FINISHINGS

21 21 Chrome

2B 2B Polished Nickel

2F 2F Brushed Nickel

40 40 Matt Black

CHARACTERISTICS

Cartridge Spare Parts **ZZ95409000**

35 mm Cartridge

EcoStop

EcoStop feature limits water flow to approximately 50% of maximum output with one point of resistance on setting. Push slightly past the middle stop only when full water output is required. This will save water up to 50%.

2026-06-13

© 2021 Cisal. Via Pietro Durio 160 - 28010 - Alzo (NO) - Italia
Mail: cisal@cisal.it, Telefono: (+39) 0322 918111, P.Iva IT02422810032.