Cisal
TEL. (+39) 0322 918111
MAIL. cisal@cisal.it

Exposed simple tap TR_TR001500

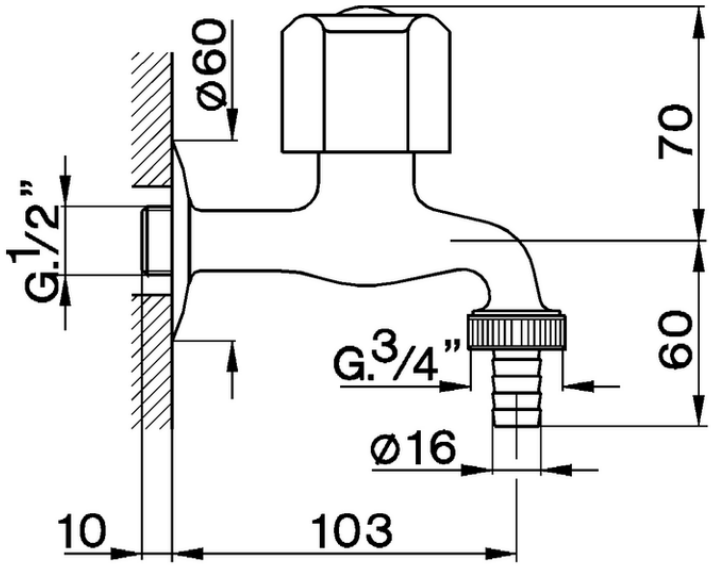

TR001500

https://en.cisal.it/exposed-simple-tap-tr-tr001500

2026-03-03

© 2021 Cisal. Via Pietro Durio 160 - 28010 - Alzo (NO) - Italia
Mail: cisal@cisal.it, Telefono: (+39) 0322 918111, P.Iva IT02422810032.