Cisal
TEL. (+39) 0322 918111
MAIL. cisal@cisal.it

# 2-functions Thermostatic shower set SHOWER COLUMNS_CVC82010

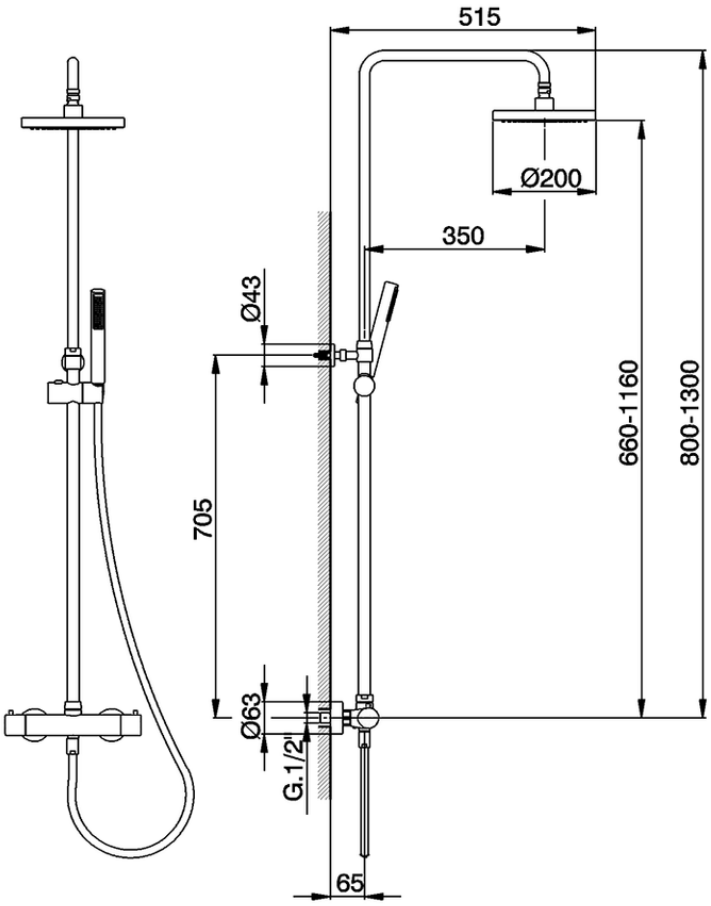


CVC82010

https://en.cisal.it/2-functions-thermostatic-shower-set-shower-columns-cvc82010

2026-04-05

© 2021 Cisal. Via Pietro Durio 160 - 28010 - Alzo (NO) - Italia
Mail: cisal@cisal.it, Telefono: (+39) 0322 918111, P.Iva IT02422810032.