Cisal
TEL. (+39) 0322 918111
MAIL. cisal@cisal.it

Deck-mounted 4-hole bath mixer BARCELONA_BA000290

MODEL **BA000290**

Deck-mounted 4-hole bath mixer,2 outlet diverter,Brass minimalistic one spray handshower,175 cm inox flexible hose

AVAILABLE FINISHINGS

21 21 Chrome

2A 2A Satin Brushed Nickel

40 40 Matt Black

CHARACTERISTICS

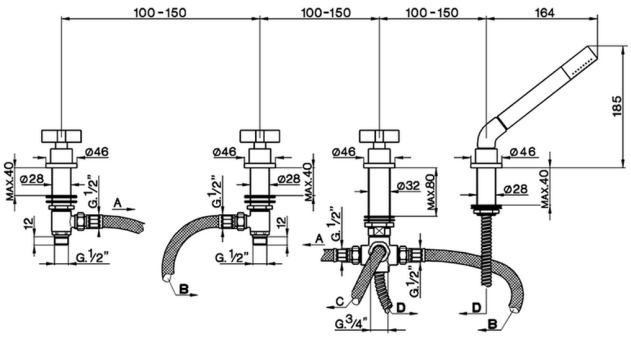

© 2021 Cisal. Via Pietro Durio 160 - 28010 - Alzo (NO) - Italia
Mail: cisal@cisal.it, Telefono: (+39) 0322 918111, P.Iva IT02422810032.

Deck-mounted 4-hole bath mixer BARCELONA_BA000290

cisal

BA 00029

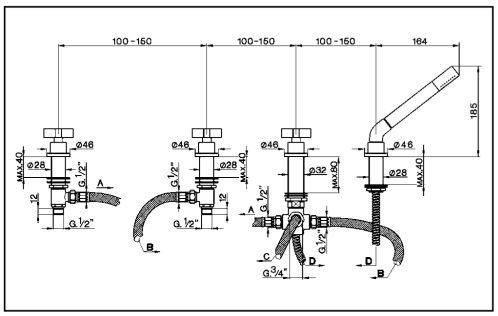

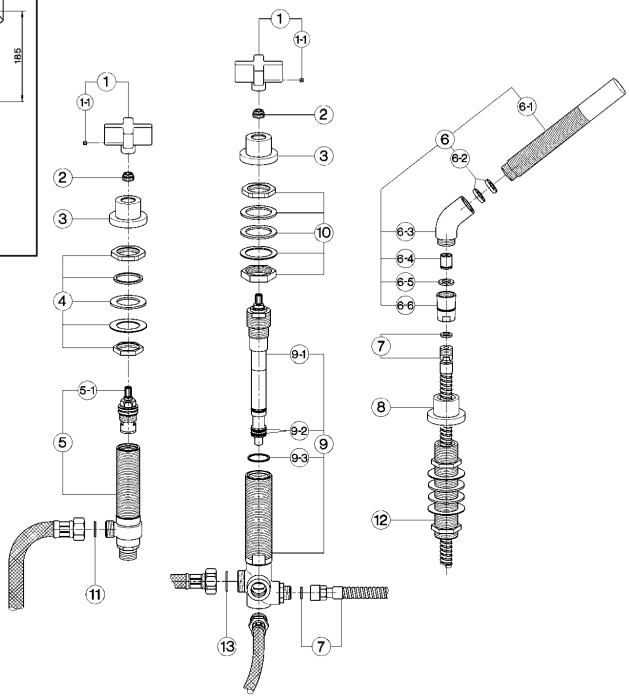

- **Batteria bordo vasca a 4 fori**
- ***Deck-mounted 4-hole bath mixer***
- **4 Loch - Badebatterie**
- ***Mélangeur B/D 4-trous sur gorge***

bar	PORTATA * *FLOW RATE* DURCHFLUSS *DÉBIT* l/min.
0.5	14
1	20
2	29
3	35.5
4	41
5	46.5

* senza resistenza silenziosa (uscita libera)
without hydraulic resistance
ohne Widerstand
sans résistance hydraulique

NR.	DESCRIZIONE *DESCRIPTION* BESCHREIBUNG *DÉSCRIPTION*	N. CODICE *CODE NO.* WERKSNR. *NR. CODE*
1	Maniglia "BA" per monofori *Handle "BA" for single hole mixer* Griff "BA" f/Einloch-Batterien *Croisillon "BA" pour mélangeur monotrou*	ZZ 93289 0
1-1	Grano punta piana inox M.4x4 *Screw-stainless steel M.4x4* Madenschraube M.4x4 *Vis speciale inox M.4x4*	ZZ 93328 0
2	Riduzione brocciata completa *Complete broached reduction piece* Verkuerzung Raeumwerkzeug komplett *Reduction avec brochage complète*	ZZ 93330 0
3	Cappuccio per batteria lavabo *Escutcheon for basin mixer* Abdeckkappe - WT *Rosace lavabo*	ZZ 93333 0
4	Set installazione batteria lavabo *Installation set basin mixer* Befestigungsset *Set installation*	ZZ 93348 0
5	Piantana vitone DX *Tail piece-basin mixer right* Unterteil WT m/Oberteil rechts *Corp lat. lav. tête droite*	ZZ 92888 0
5-1	Vitone ceramico 1/2" DX 90° *Ceramic headvalve 1/2" right 90°* Keramikoberteil 1/2" - rechts - 90° *Tête céram. 1/2" droite 90°*	ZZ 92907 0
6	Doccia minimale per batteria vasca *Handshower minimal for bath mixer* Handbrause minimal f/Badebatterie *Douchette minimal sur gorge*	ZZ 93368 0
6-1	Doccia minimale *Minimal handshower* Handbrause minimal *Douchette minimal*	DS 01409 0

NR.	DESCRIZIONE *DESCRIPTION* BESCHREIBUNG *DÉSCRIPTION*	N. CODICE *CODE NO.* WERKSNR. *NR. CODE*
6-2	Guarnizione NBR 75 SH. 19,1x10x3,5 *Gasket NBR 75 SH. 19,1x10x3,5* Dichtung NBR 75 SH. 19,1x10x3,5 *Joint NBR 75 SH. 19,1x10x3,5*	ZZ 92715 0
6-3	Curvetta doccia batteria vasca *Connection for handshower* Brausewinkel f/WB *Raccord douche s/gorge*	ZZ 92601 0
6-4	Valvola anti-ritorno Ø15 per doccia *Back-flow valve Ø15* Durchflussverhinderer Ø15 *Clapet anti-retour Ø15*	ZZ 92956 0
6-5	Guarnizione fibra 18,5x11x2 *Gasket rubber 18,5x11x2* Fiberdichtung 18,5x11x2 *Joint en fibre 18,5x11x2*	ZZ 92714 0
6-6	Raccordo conico doccia batteria vasca *Connection for shower* Anschluss *Raccord douche s/gorge*	ZZ 92680 0
7	Flessibile 175 cm Ø14 3/8" x M.15x1 *Flex 175 cm Ø14 3/8" M.15x1* Brauseschlauch 175 cm Ø14 3/8" x M.15x1 *Flex 175 cm Ø14 3/8" x M.15x1*	ZZ 92757 0
8	Cappuccio supporto doccia batteria vasca *Escutcheon shower* Abdeckkappe *Rosace douche*	ZZ 93367 0
9	Gruppo deviazione batteria bordo vasca "BA" *Diverter for bath mixer "BA"* Umsteller f/Wannenbatterie "BA" *Inverseur - B/D "BA"*	ZZ 93369 0
9-1	Vitone deviazione batteria vasca "BA" *Diverting valve for "BA" mixer* Umstelloberteil "BA" *Tête pour inverseur "BA"*	ZZ 93370 0

NR.	DESCRIZIONE *DESCRIPTION* BESCHREIBUNG *DÉSCRIPTION*	N. CODICE *CODE NO.* WERKSNR. *NR. CODE*
9-2	O.R. 11 NBR 75 SH. *O.R. 11 NBR 75 SH.* O.R. 11 NBR 75 SH. *O.R. 11 NBR 75 SH.*	ZZ 92690 0
9-3	Guarnizione fibra 27x24x1 *Gasket rubber 27x24x1* Fiberdichtung 27x24x1 *Joint en fibre rouge 27x24x1*	ZZ 92687 0
10	Set installazione deviatore batteria vasca *Installation set* Befestigungssatz f/Umsteller Wannenrandmtg *Set installation inverseur B/D*	ZZ 93444 0
11	Guarnizione fibra 18,5x11x2 *Gasket rubber 18,5x11x2* Fiberdichtung 18,5x11x2 *Joint en fibre 18,5x11x2*	ZZ 92714 0
12	Supporto doccia batteria bordo vasca "BA" *Deck-mounted handshower support "BA"* Brausehalter "BA" *Support douche "BA"*	ZZ 93402 0
13	Guarnizione NBR 90 SH. 24x16x2,7 *Gasket NBR 90 SH. 24x16x2,7* Dichtung NBR 90 SH. 24x16x2,7 *Joint NBR 90 SH. 24x16x2,7*	ZZ 92689 0

© 2021 Cisal. Via Pietro Durio 160 - 28010 - Alzo (NO) - Italia
Mail: cisal@cisal.it, Telefono: (+39) 0322 918111, P.Iva IT02422810032.