Cisal
TEL. (+39) 0322 918111
MAIL. cisal@cisal.it

Single lever bidet mixer EnergySave ALMA_A3000555

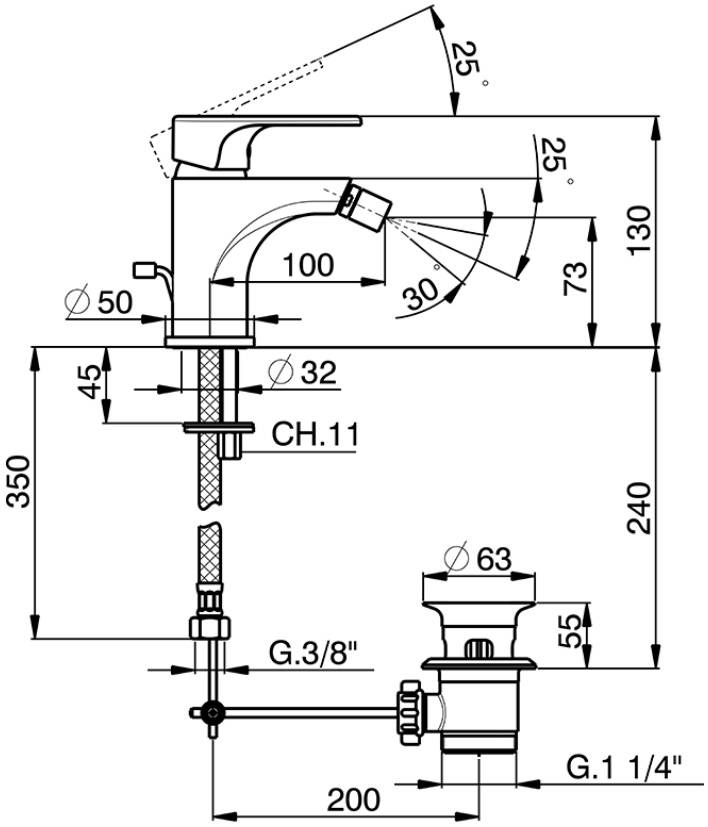

A3000555

https://en.cisal.it/single-lever-bidet-mixer-energysave-alma-a3000555

2026-05-20

© 2021 Cisal. Via Pietro Durio 160 - 28010 - Alzo (NO) - Italia
Mail: cisal@cisal.it, Telefono: (+39) 0322 918111, P.Iva IT02422810032.