Cisal
TEL. (+39) 0322 918111
MAIL. cisal@cisal.it

Exposed part for con.thermo.shower valve, 2-outlet ARCANA ROYAL_AY018100

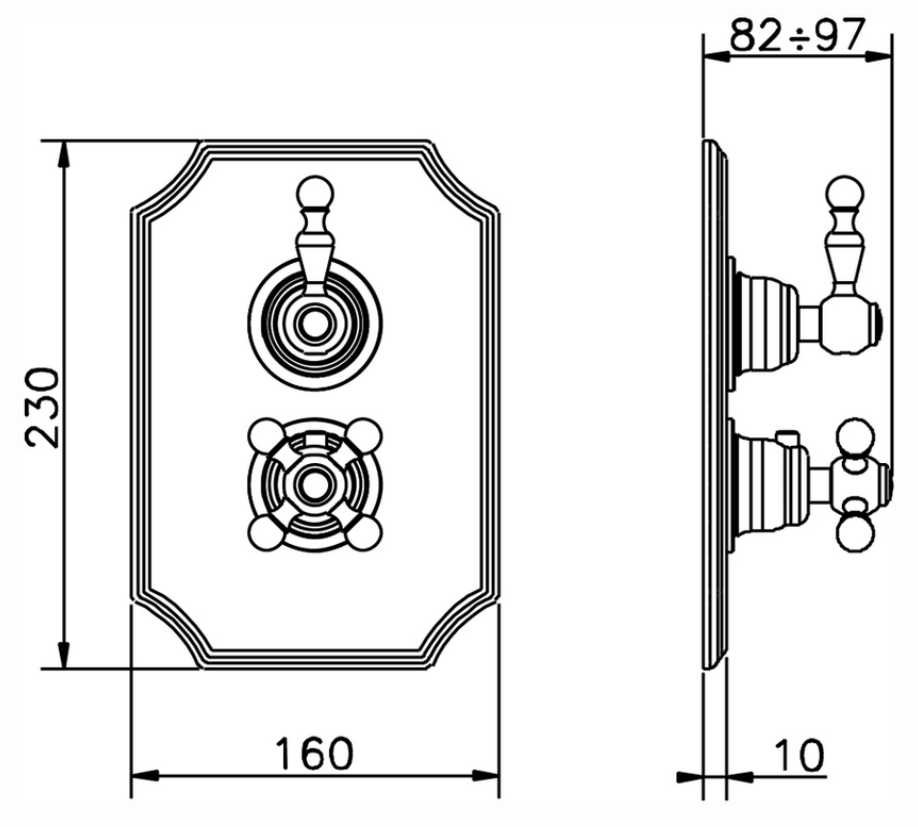

AY018100 https://en.cisal.it/exposed-part-for-con-thermo-shower-valve-2-outlet-arcana-royal-ay018100

© 2021 Cisal. Via Pietro Durio 160 - 28010 - Alzo (NO) - Italia
Mail: cisal@cisal.it, Telefono: (+39) 0322 918111, P.Iva IT02422810032.

Cisal
TEL. (+39) 0322 918111
MAIL. cisal@cisal.it

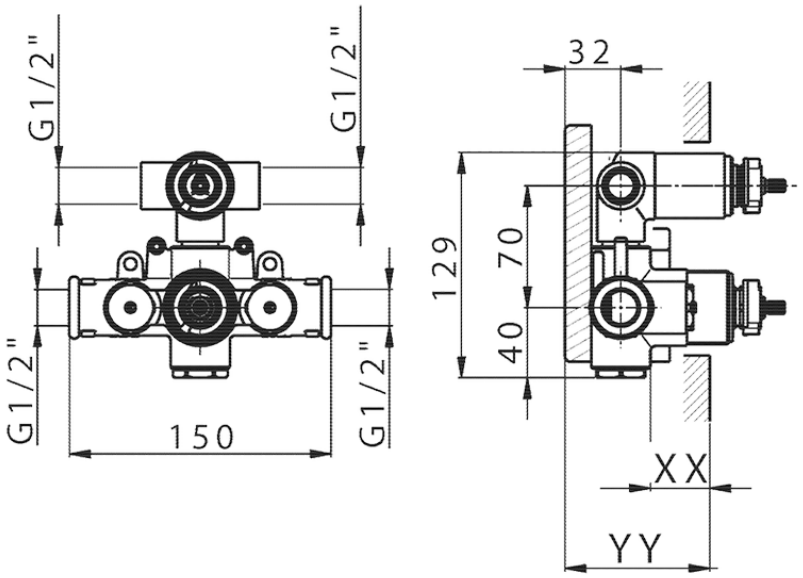

Piastra/Plate/Plaque/Platte/Placa
2-3mm: XX 25-40 YY 76-91
10 mm: XX 16-31 YY 65-80

© 2021 Cisal. Via Pietro Durio 160 - 28010 - Alzo (NO) - Italia
Mail: cisal@cisal.it, Telefono: (+39) 0322 918111, P.Iva IT02422810032.