Cisal
TEL. (+39) 0322 918111
MAIL. cisal@cisal.it

Thermostatic deck-mounted 4-hole mixer GRACE_GST76010

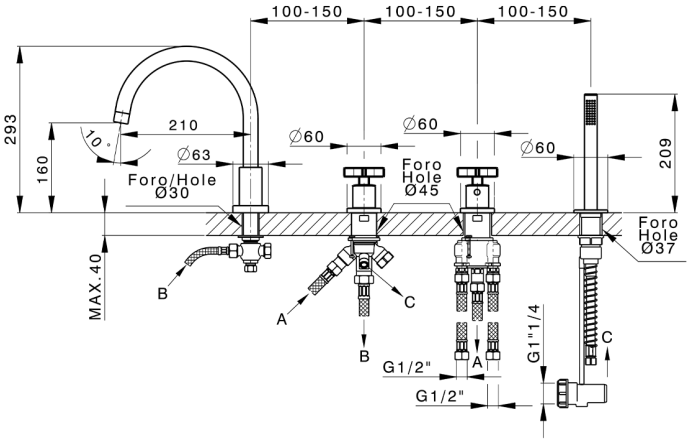

MODEL **GST76010**

Thermostatic deck-mounted 4-hole mixer,2 outlet diverter,22,5 mm Brass One Spray handshower,150 cm pull-out flexible hose

AVAILABLE FINISHINGS

21 21 Chrome

2F 2F Brushed Nickel

2W 2W Brushed Gold

5H 5H Dark Brass Brushed

5L 5L Brushed Black Titanium

6T 6T Chrome/Matt Black

CHARACTERISTICS

Cartridge Spare Parts **24.04A.PP**

8x20 Plus P Thermostatic Valve

2026-06-14

© 2021 Cisal. Via Pietro Durio 160 - 28010 - Alzo (NO) - Italia
Mail: cisal@cisal.it, Telefono: (+39) 0322 918111, P.Iva IT02422810032.