Cisal
TEL. (+39) 0322 918111
MAIL. cisal@cisal.it

Single lever bath mixer, with shower set ROADSTER ACCENT_RA000120



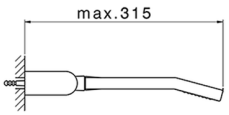

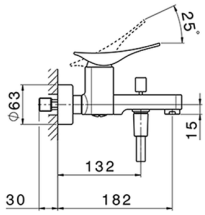

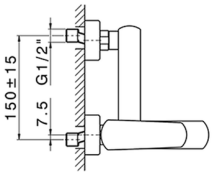

MODEL **RA000120**

Single lever bath mixer, with shower set,wall mounted adjustable handshower bracket,42x18 mm ABS Quad one spray handshower,150 cm SUPREME smooth flexible hose

AVAILABLE FINISHINGS

21 21 Chrome

2B 2B Polished Nickel

2F 2F Brushed Nickel

2Q 2Q Black Titanium

40 40 Matt Black

4Q 4Q Matt White

CHARACTERISTICS

Cartridge Spare Parts **ZZ96799000**

35 mm Cartridge

© 2021 Cisal. Via Pietro Durio 160 - 28010 - Alzo (NO) - Italia
Mail: cisal@cisal.it, Telefono: (+39) 0322 918111, P.Iva IT02422810032.

Cisal
TEL. (+39) 0322 918111
MAIL. cisal@cisal.it

Single lever bath mixer, with shower set ROADSTER ACCENT_RA000120

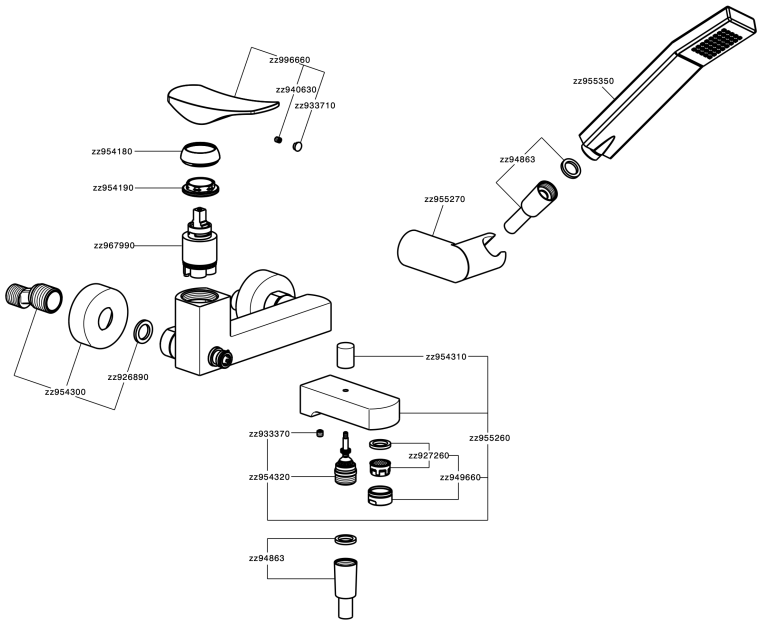

RA000120 https://en.cisal.it/single-lever-bath-mixer-with-shower-set-roadster-accent-ra000120

2026-11-25

© 2021 Cisal. Via Pietro Durio 160 - 28010 - Alzo (NO) - Italia
Mail: cisal@cisal.it, Telefono: (+39) 0322 918111, P.Iva IT02422810032.