Cisal
TEL. (+39) 0322 918111
MAIL. cisal@cisal.it

Exposed part for concealed thermo shower valve ROADSTER ACCENT_RA007200



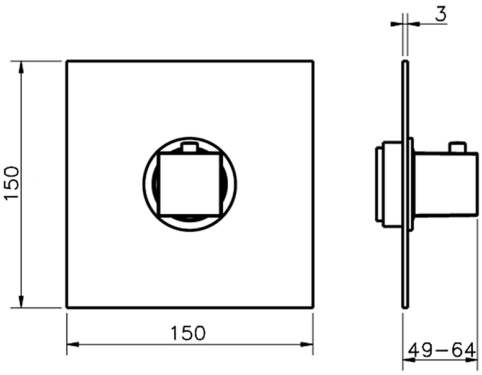

MODEL **RA007200**

Exposed part for concealed thermo shower valve,without stop valve,without concealed part,for item ZA007220

AVAILABLE FINISHINGS

	21	21 Chrome
	2B	2B Polished Nickel
	2F	2F Brushed Nickel
	2Q	2Q Black Titanium
	40	40 Matt Black
	4Q	4Q Matt White

CHARACTERISTICS

Installation	**Concealed**
Required concealed parts	**ZA007220**

Thermostatic

The Cisal thermostatic is your personal water manager, helping you to handle, control and save water and energy.

© 2021 Cisal. Via Pietro Durio 160 - 28010 - Alzo (NO) - Italia
Mail: cisal@cisal.it, Telefono: (+39) 0322 918111, P.Iva IT02422810032.

Cisal
TEL. (+39) 0322 918111
MAIL. cisal@cisal.it

3/4 Concealed thermostatic valve CONCEALED_ZA007220

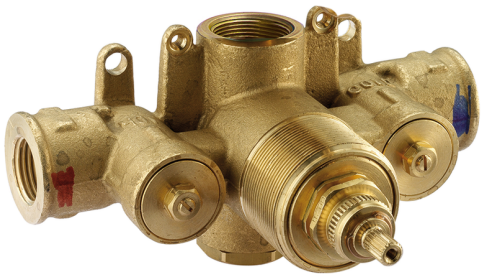

MODEL **ZA007220**

3/4" Concealed thermostatic valve,without Stopvalve,without trim kit

AVAILABLE FINISHINGS

04 04 Without finishing

CHARACTERISTICS

Concealed	**1**
Cartridge Spare Parts	**23.51A.HF**

HF Thermostatic Valve

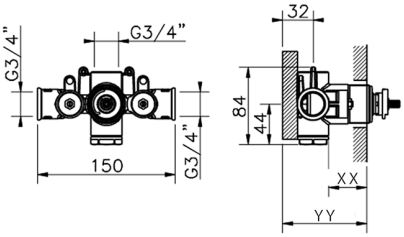

Piastra/Plate/Plaque/Platte/Placa
2-3mm: XX 25-40 YY 76-91
10mm: XX 16-31 YY 65-80

Thermostatic

The Cisal thermostatic is your personal water manager, helping you to handle, control and save water and energy.

2026-11-24

© 2021 Cisal. Via Pietro Durio 160 - 28010 - Alzo (NO) - Italia
Mail: cisal@cisal.it, Telefono: (+39) 0322 918111, P.Iva IT02422810032.