Cisal
TEL. (+39) 0322 918111
MAIL. cisal@cisal.it

Exposed part for concealed thermo shower valve ROADSTER ACCENT_RA007200

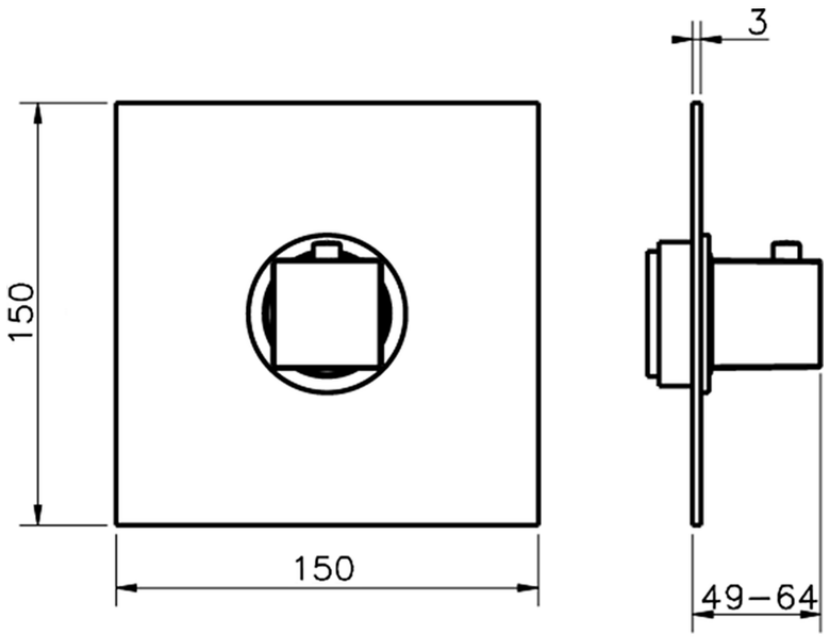

RA007200 https://en.cisal.it/exposed-part-for-concealed-thermo-shower-valve-roadster-accent-ra007200

© 2021 Cisal. Via Pietro Durio 160 - 28010 - Alzo (NO) - Italia
Mail: cisal@cisal.it, Telefono: (+39) 0322 918111, P.Iva IT02422810032.

Cisal
TEL. (+39) 0322 918111
MAIL. cisal@cisal.it

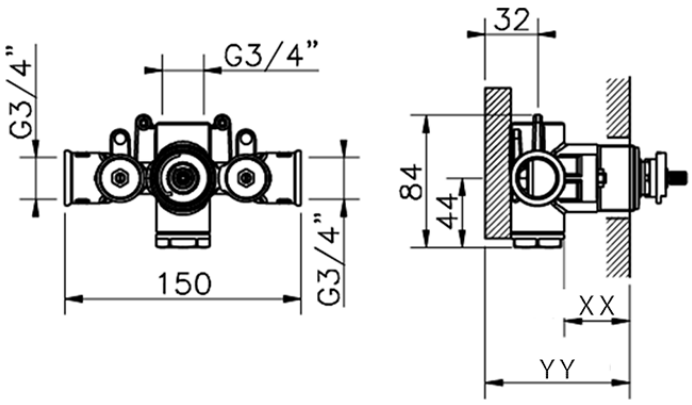

Piastra/Plate/Plaque/Platte/Placa
2-3mm: XX 25-40 YY 76-91
10mm: XX 16-31 YY 65-80

ZA007220

https://en.cisal.it/3-4-concealed-thermostatic-valve-concealed-za007220

2026-11-25

© 2021 Cisal. Via Pietro Durio 160 - 28010 - Alzo (NO) - Italia
Mail: cisal@cisal.it, Telefono: (+39) 0322 918111, P.Iva IT02422810032.