Cisal
TEL. (+39) 0322 918111
MAIL. cisal@cisal.it

Deck mounted 2-hole single lever bath mixer ARCANA ROYAL_AY001290

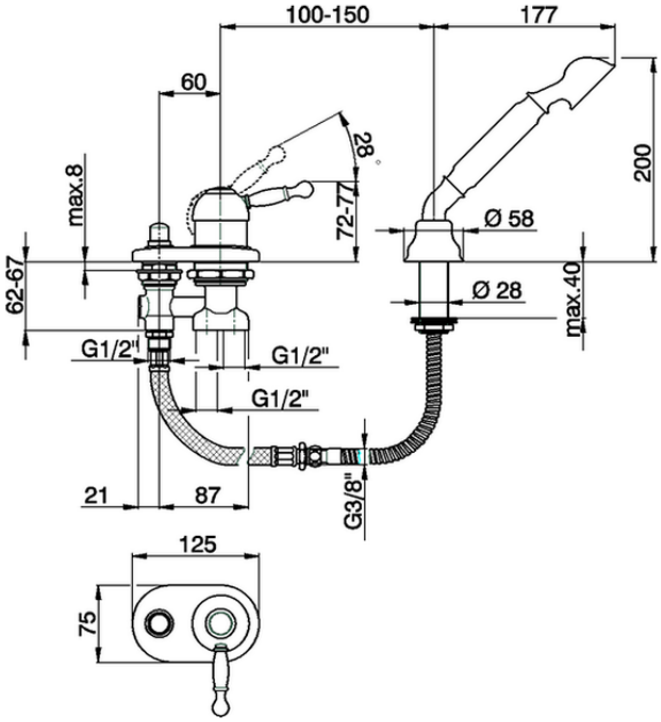

AY001290 https://en.cisal.it/deck-mounted-2-hole-single-lever-bath-mixer-arcana-royal-ay001290

2026-03-15

© 2021 Cisal. Via Pietro Durio 160 - 28010 - Alzo (NO) - Italia
Mail: cisal@cisal.it, Telefono: (+39) 0322 918111, P.Iva IT02422810032.