Cisal
TEL. (+39) 0322 918111
MAIL. cisal@cisal.it

Single lever 2-holes washbasin mixer WAVE_WA006520

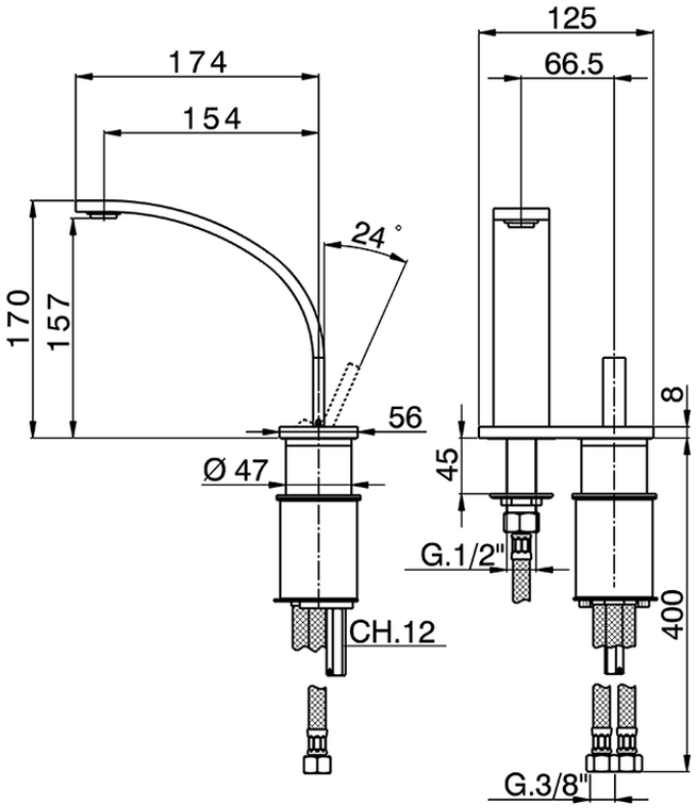

WA006520

https://en.cisal.it/single-lever-2-holes-washbasin-mixer-wave-wa006520

2026-06-04

© 2021 Cisal. Via Pietro Durio 160 - 28010 - Alzo (NO) - Italia
Mail: cisal@cisal.it, Telefono: (+39) 0322 918111, P.Iva IT02422810032.