Cisal
TEL. (+39) 0322 918111
MAIL. cisal@cisal.it

Exposed part for concealed S.L. shower valve HI-RISE_RI003000

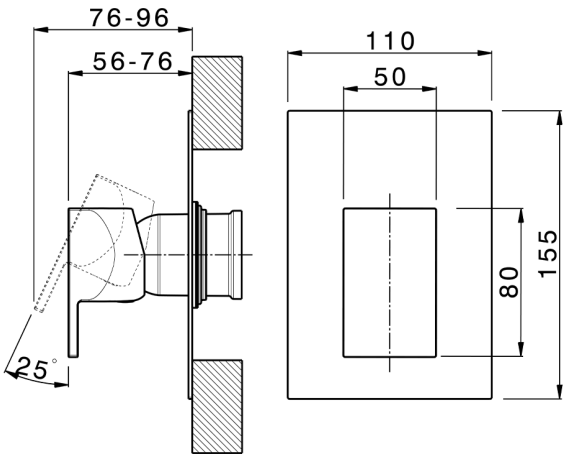

MODEL **RI003000**

Exposed part for concealed S.L.shower valve,without concealed part,for item ZA005300-ZA005301

AVAILABLE FINISHINGS

- **21** 21 Chrome
- **24** 24 Gold
- **2F** 2F Brushed Nickel
- **2W** 2W Brushed Gold
- **40** 40 Matt Black
- **4Q** 4Q Matt White
- **5G** 5G Rose Gold
- **6V** 6V Matt White/Brushed Nickel
- **6X** 6X Matt White/Brushed Gold
- **7W** 7W Matt Black/Brushed Gold

CHARACTERISTICS

Installation	**Concealed**
Required concealed parts	**ZA005301**
	ZA005300

© 2021 Cisal. Via Pietro Durio 160 - 28010 - Alzo (NO) - Italia
Mail: cisal@cisal.it, Telefono: (+39) 0322 918111, P.Iva IT02422810032.

Cisal
TEL. (+39) 0322 918111
MAIL. cisal@cisal.it

Concealed single lever shower mixer CONCEALED_ZA005301

MODEL **ZA005301**

Concealed single lever shower mixer,1/2" concealed shower,without trim kit,with noise reducers

AVAILABLE FINISHINGS

04 04 Without finishing

CHARACTERISTICS

Concealed	**1**
Cartridge Spare Parts	**ZZ94035000**

35 mm Cartridge

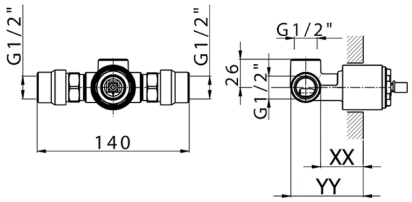

Piastra/Plate/Plaque/Platte/Placa
2-3mm: XX 27-47 YY 54-74
10mm: XX 16-40 YY 43-68

© 2021 Cisal. Via Pietro Durio 160 - 28010 - Alzo (NO) - Italia
Mail: cisal@cisal.it, Telefono: (+39) 0322 918111, P.Iva IT02422810032.

Cisal
TEL. (+39) 0322 918111
MAIL. cisal@cisal.it

Concealed single lever shower mixer CONCEALED_ZA005300

MODEL **ZA005300**

Concealed single lever shower mixer,1/2" concealed shower,without trim kit

AVAILABLE FINISHINGS

04 04 Without finishing

CHARACTERISTICS

Concealed	**1**
Cartridge Spare Parts	**ZZ94035000**

35 mm Cartridge

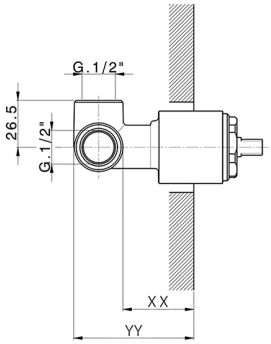

Piastra/Plate/Plaque/Platte/Placa
2-3mm: XX 27-47 YY 54-74
10mm: XX 16-40 YY 43-68

2026-02-23

© 2021 Cisal. Via Pietro Durio 160 - 28010 - Alzo (NO) - Italia
Mail: cisal@cisal.it, Telefono: (+39) 0322 918111, P.Iva IT02422810032.